REVISIONS					
REV	ECO	DESCRIPTION	DATE	BY	APPR
A1	-	NEW RELEASE	16/JAN/15	TOM	TOMMY
A2	-	UPDATED DRAWING	14/MAR/15	ORION	TOMMY

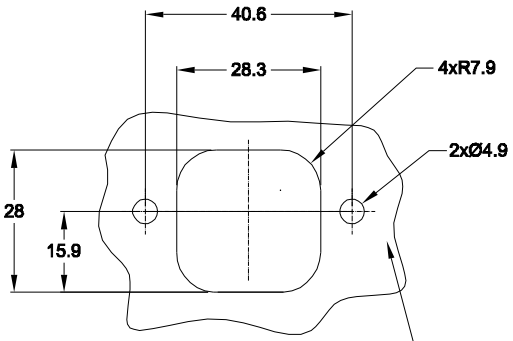

RECOMMENDED PANEL CUTOUTS

INTERNAL SEALING SUFACE FINISH TO BE 3.2 OR BETTER

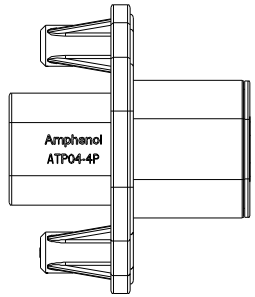

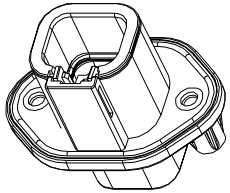

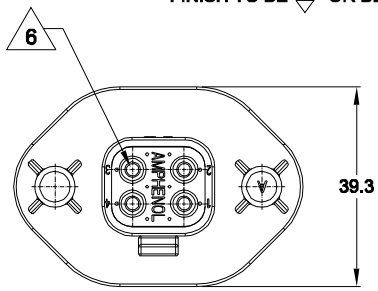

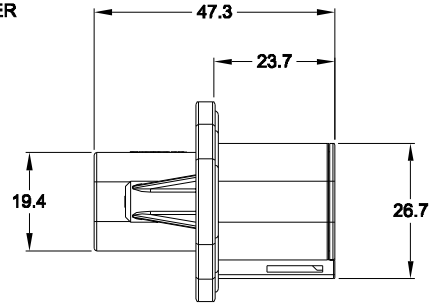

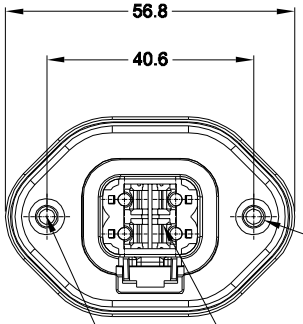

2X Ø4
BLIND HOLE
15.2mm MIN. DEEP

REQUIRES CONTACT RETENTION WEDGE AWP-4P

WILL ACCEPT PLASTIC SELF THREAD SCREWS: EXAMPLE: ST4.8

RECOMMENDED TORQUE VALUES: 1.9-2.2 N.M

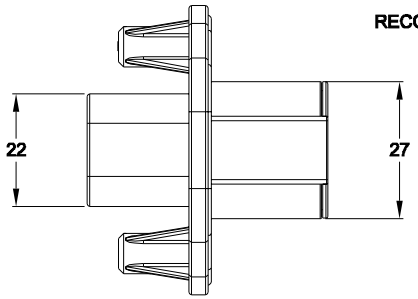

NOTES: UNLESS OTHERWISE SPECIFIED

1. MATERIAL:
   HOUSING: THERMOPLASTIC; COLOR: SEE P/N CHART
   SEAL: SILICONE RUBBER

2. MODIFICATIONS: FLANGE MOUNTING;

3. SPECIFICATIONS:
   3.1 CURRENT RATING: 25 AMPS
   3.2 OPERATING TEMPERATURE: -55°C TO +125°C
   3.3 DIELECTRIC WITHSTANDING VOLTAGE: LESS THAN 2 MILLIAMPS CURRENT LEAKAGE @ 1500 VOLTS AC.
   3.4 INSULATION RESISTANCE: 1000 MEGOHMS MIN @ 25°C.
   3.5 MOISTURE RESISTANCE: IP67 (MATED CONDITION)
   3.6 MATING CYCLE DURABILITY: 100 CYCLES
   3.7 RoHS COMPLIANT

4. MATING PART: ATP06-4S* PLUG.
   (* = MODIFICATIONS AND COLORS)

5. ALL DIMENSIONS ARE FOR REFERENCE USE ONLY.

6 CONTACT SIZE AND REAR SEAL WIRE RANGE:

CONTACT SIZE	MIN. INSUL O.D.	MAX. INSUL O.D.	TYPICAL WIRE RANGE
12	3.40 mm (.134 in)	4.95 mm (.195 in)	10 - 14 AWG

PART NUMBER CHART	
COLOR	PART NUMBER
BLACK	ATP04-4P-PM07G
GREY	ATP04-4P-PM08G

QUANTITY	PART NUMBER	DESCRIPTION	ITEM
	SEE PART NUMBER CHART		

MATERIALS LIST

UNLESS OTHERWISE SPECIFIED
1) All dimensions are in metric(mm).
2) Tolerances are as follows:
1 PL DEC ±0.30 | Fractions ±1/64
2 PL DEC ±0.15 | Angles ±1°
3 PL DEC ±0.08
3) Note reference = x

MATERIAL SPECIFICATIONS:

PROCESS SPECIFICATIONS:

NEXT ASS'Y:

SIGNATURES		DATE
DRAWN:	ORION.LI	16/JAN/15
CHECKED:		
ENGINEER:		
APPROVAL:		
CUSTOMER:		

THIS DRAWING IS SUPPLIED FOR INFORMATION ONLY. DESIGN FEATURES, SPECIFICATIONS AND PERFORMANCE DATA SHOWN HEREON ARE THE PROPERTY OF THE AMPHENOL CORPORATION. NO RIGHTS OF REPRODUCTION ARE IMPLIED. ALL DIMENSIONS ARE SUBJECT TO NORMAL MANUFACTURING VARIATIONS.

Amphenol

Sine Systems - www.amphenol-sine.com
44724 Morley Drive
Clinton Township, MI 48036

RECEPTACLE, 4 PIN,
ATP SERIES, PANEL MOUNT

SIZE	TYPE	DWG NO:	REVISION
B	C-	ATP04-4P-PM0XG	A2

SCALE: NONE SHEET 1 OF 1

TITLE: RECEPTACLE, 4 PIN, ATP SERIES, PANEL MOUNT
DWG NO: ATP04-4P-PM0XG
REV: A2
SH: 1
OF: 1

Downloaded From Oneyac.com

ONEYAC 唯样商城 | 电子元器件线上授权代理开拓者
原厂授权 · 正品现货 · 一件即发

单击下面可查看定价，库存，交付和生命周期等信息

>>Amphenol(安费诺)

Downloaded From Oneyac.com