BS,C ,201843,803	C

GEN. ST.	01	02	03	04	05	06	07	08	0D	50	60	70	80	90
INT. ST.	10 11	12 13	14 18	20 31	32 33	34 38	39 40	42 43	44 45	46 48	56 70	72 73	75 76	81 82 83 84 88

REV.	DATE	DESCRIPTION	BY	C'K'D'
A	14-09-01	CONVERSION REVISION 02	KN	
B	28-05-02	EC B20086	MF	
C	02-08-05	105-0135	ALEX B	BKP

LOADING PATTERN MATING SIDE

f	6	6	6	6	6	6	6	6	6	6	6	6	6	6	6	6	6	6	6	6	6	6	6	6
e	4	4	4	4	4	4	4	4	4	4	4	4	4	4	4	4	4	4	4	4	4	4	4	4
d	4	4	4	4	4	4	4	4	4	4	4	4	4	4	4	4	4	4	4	4	4	4	4	4
c	4	4	4	4	4	4	4	4	4	4	4	4	4	4	4	4	4	4	4	4	4	4	4	4
b	4	4	4	4	4	4	4	4	4	4	4	4	4	4	4	4	4	4	4	4	4	4	4	4
a	4	4	4	4	4	4	4	4	4	4	4	4	4	4	4	4	4	4	4	4	4	4	4	4
z	6	6	6	6	6	6	6	6	6	6	6	6	6	6	6	6	6	6	6	6	6	6	6	6
POS	01				05				10				15				20							25

SHEET NR. :

LOADED CONNECTOR ASSEMBLY
(FOR EXAMPLE)

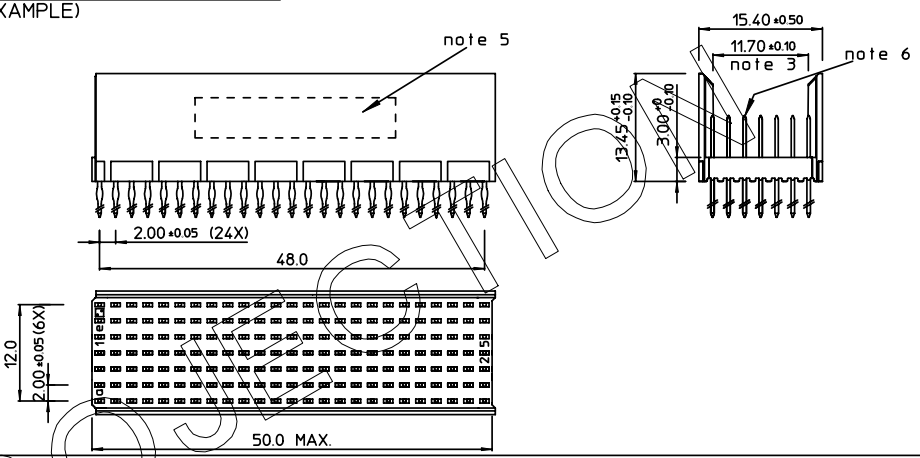

CONTACT OVERVIEW

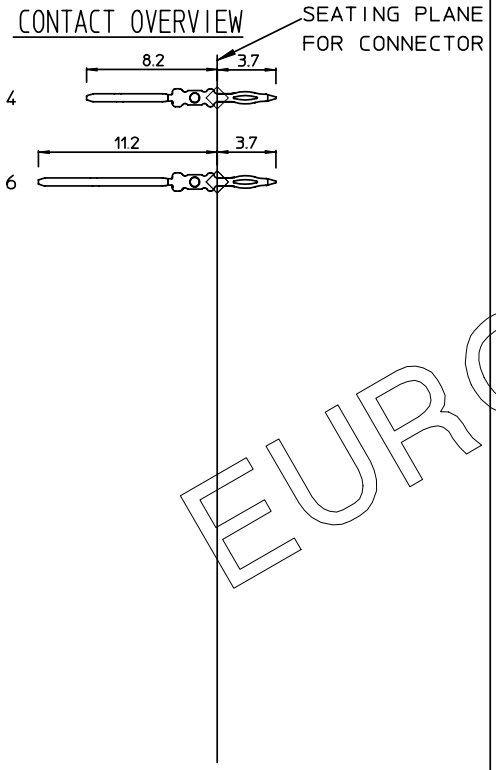

LAY-OUT P.C.B.-HOLE

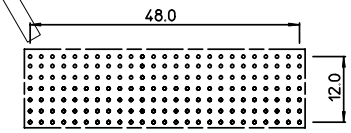

HM2P--P-------

LEAD FREE INDICATOR : LF = LEAD FREE
(DIGIT 15 & 16)

PLATING CODE (DIGIT 13 AND 14)
(REF DWG No. BS,C ,201844,003)

NOTES:

1. THIS PRODUCT IS CSA APPROVED.
2. THIS PRODUCT IS UL RECOGNIZED.
3. MEASURED AT THE BOTTOM.
4. MATERIAL CONTACT: PHOSPHORBRONZE
   HOUSING: CREAM WHITE GLASSFILLED POLYESTER UL-94V0
5. CONNECTOR PRINTED WITH P/N AND DATE CODE.
6. FOR ACTUAL CONTACT LOADINGS, SEE LOADING PATTERN MATING SIDE.
7. SHAPE OF CONNECTOR HOUSING CAN ALTER DEPENDING ON PRODUCTION LOCATION.
8. THE PRODUCT (LF) MEETS EUROPEAN UNION DIRECTIVES AND OTHER COUNTRY REGULATIONS AS DESCRIBED IN GS-22-008
9. FOR RECOMMENDED PTH DIMENSIONS REFER DRAWING : BS,A ,201572,001

EUROPEAN PROJECTION

1DEC ±0,2 1DEC 2DEC ±0,1 2DEC ANGLES ±1° HOEKEN	APPR.	DATE	SIGN.	LOADING PATTERN OVERVIEW
	DRAFT	20-09-99	M.Fret	CAT. No. HM2P08PD5111----
	CHECKED			
WE RESERVE THE RIGHT TO CHANGE DIMENSIONS OR REQUIREMENTS WITHOUT PRIOR NOTICE.	PROD. MGR.			FCI MECHELEN N.V. A. SPINOYSTRAAT 8, 2800 MECHELEN — SCALE
	PR.ENG.MGR.			
ALL DIMENSIONS IN MM	PR.MGT.MGR.			
ALLE AFMETINGEN IN MM	REFERENCES/REFERENTIES			BS,C ,201843,803 — C

DRAWING No. — CUSTOMER DRAWING — REVISION

THIS IS OUR EXCLUSIVE PROPERTY. IT IS NOT TO BE COPIED, REPRINTED OR DISCLOSED TO A THIRD PARTY, NOR USED FOR MANUFACTURING WITHOUT OUR WRITTEN CONSENT, AND HAS TO BE RETURNED TO

DIT IS ONZE EIGENDOM EN MAG NOCH NAGEMAAKT, HERDRUKT, OVERGEMAAKT AAN DERDEN, NOCH VOOR FABRICATIE GEBRUIKT WORDEN, ZONDER ONZE SCHRIFTELIJKE TOESTEMMING EN DIENT OP VERZOEK TERUGGEZONDEN TE WORDEN.

Downloaded From Oneyac.com

PDM: Rev:C STATUS: Released Printed: Dec 28, 2005

单击下面可查看定价，库存，交付和生命周期等信息

>>Amphenol(安费诺)

Downloaded From Oneyac.com