10144517- AA B C D E FF

AA	POSITION
02	2X10
04	2X20
06	2X30
08	2X40
10	2X50
12	2X60

B	FOR PLUG, SEE DWG. NO. 10144518			
COMBINATION OF MATED HEIGHT	Plug 1	Plug 2	Plug 3	Plug 4
Recep 1	5	6	7	8
Recep 2	9	10	11	12
Recep 3	13	14	15	16
Recep 4	17	18	19	20

E	PACKAGING
2	T&R WITH METAL CAP
3	T&R WITHOUT CAP
6	T&R WITH KAPTON TAPE

D	POLARIZATION PEG	HOLD DOWN
0	YES	NO
2	NO	NO

C	PLATING ON CONTACT AREA	FF
8	GOLD FLASH (0.05um MIN) ON CONTACT AREA; PURE TIN 2.5um MIN (LEAD FREE) ON SOLDER TAIL NICKEL UNDERPLATE OVERALL 1.27um MIN	LF

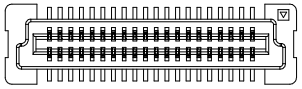

WITHOUT CAP

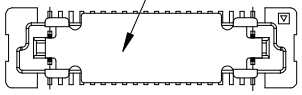

WITH METAL CAP

NOTE:

1. MATERIAL:
   HOUSING: G.F. LCP, NATURAL, UL94-V0
   TERMINAL: COPPER ALLOY
2. PLATING: AS SHOWN IN TABLE.
3. SEE GS-12-1424 FOR PRODUCT SPEC.
4. THIS PRODUCT MEETS THE EUROPEAN UNION DIRECTIVES AND OTHER COUNTRY REGULATIONS AS DESCRIBED IN GS-22-008.
5. THE HOUSING WILL WITHSTAND EXPOSURE UP TO 260~ PEAK TEMPERATURE FOR 30 SECONDS IN A CONVECTION, INFRA-RED OR VAPOR PHASE REFLOW OVEN.

ltr	ecn no	dr	date
A		Bob	07/25/17
B	ELX-N-32751	Bob	02/22/19
C	ELX-N-45660	Alan	08/17/22
D	ELX-N-46620	Alan	11/30/22

dr	Bob Gu	07/05/17
engr	Alan Ni	11/30/22
chr	LQ Lei	11/30/22
appd	Tim Yao	11/30/22

sheet index	revision	A	B	C	D
	sheet	1~7	1~7	1	1~7

mat'l. code

surface ISO 1302

tolerance ISO 406 ISO 1101

projection

tolerances unless otherwise specified

angles X°±2°

linear .0±.2 / .00±.15 / .000±.10

mm

scale 1:1

product family: BERGSTAK

title: RECEPTACLE ASSY BERGSTAK 0.8MM

dwg no 10144517 sheet 1 of 7

size A3

type Product Customer Drawing

form: A3-2016-02-24

© 2016 AFCI

Printed: Dec 07, 2022 STATUS:Released PDS: Rev :D

Downloaded From Oneyac.com

PRODUCT NO.	NUMBER OF POSITIONS	DIMENSION		
		A	B	C
10144517-021***	2X10	7.2	13.8	12.2
10144517-041***	2X20	15.2	21.8	20.2
10144517-061***	2X30	23.2	29.8	28.2
10144517-081***	2X40	31.2	37.8	36.2
10144517-101***	2X50	39.2	45.8	44.2
10144517-121***	2X60	47.2	53.8	52.2

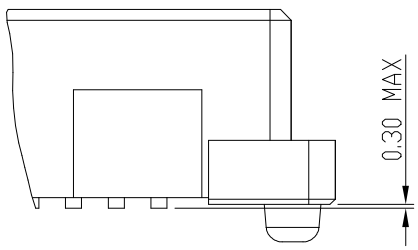

COPLANARITY OF TAIL:
0.1 MAX. APPLIED TO 2X10 TO 2X60 POS.

DETAIL A
SCALE 10:1

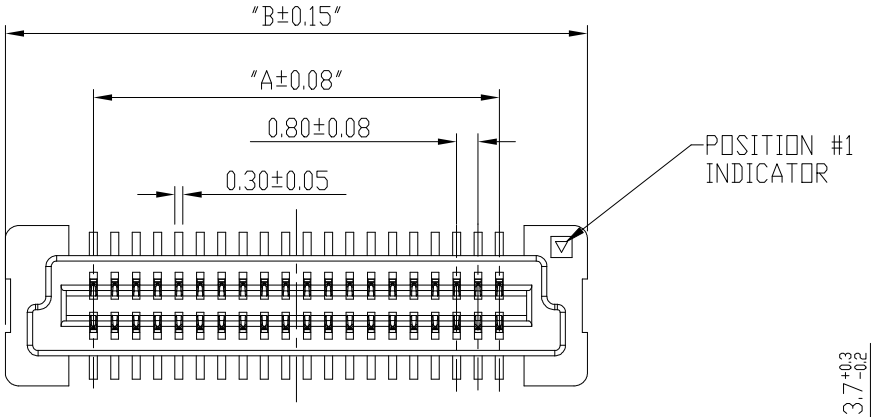

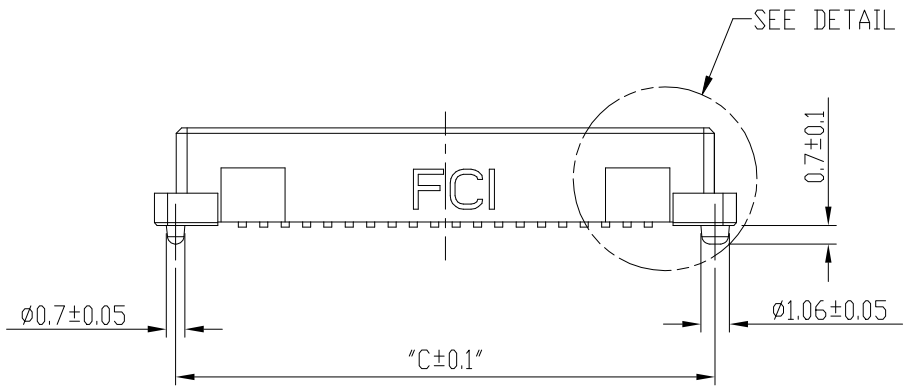

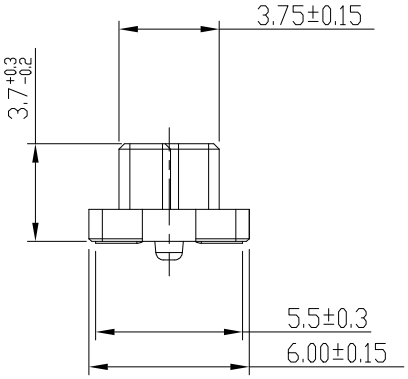

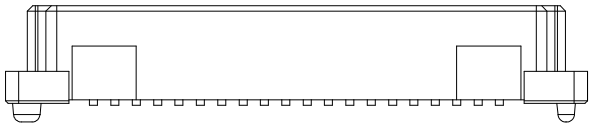

RECEPTACLE 1

mat'l. code				surface B ISO 1302	tolerance ISO 406 ISO 1101	projection	product family BERGSTAK
ltr	ecn no	dr	date	tolerances unless otherwise specified			title
D				angles	linear .0±.2 / .00±.15 / .000±.10	mm	RECEPTACLE ASSY BERGSTAK 0.8MM
				X°±2°		scale 1:1	
				dr	Bob Gu 07/05/17	Amphenol FCi	dwg no 10144517 sheet 2 of 7 size A3
				engr	Alan Ni 11/30/22		
				chr	LQ Lei 11/30/22		
				appd	Tim Yao 11/30/22		type Product Customer Drawing

sheet index	revision	A	B	C	D
	sheet	1~7	1~7	1	1~7

form: A3-2016-02-24

© 2016 AFCI
Amphenol FCi
PDS: Rev :D STATUS:Released Printed: Dec 07, 2022
Downloaded From Oneyac.com

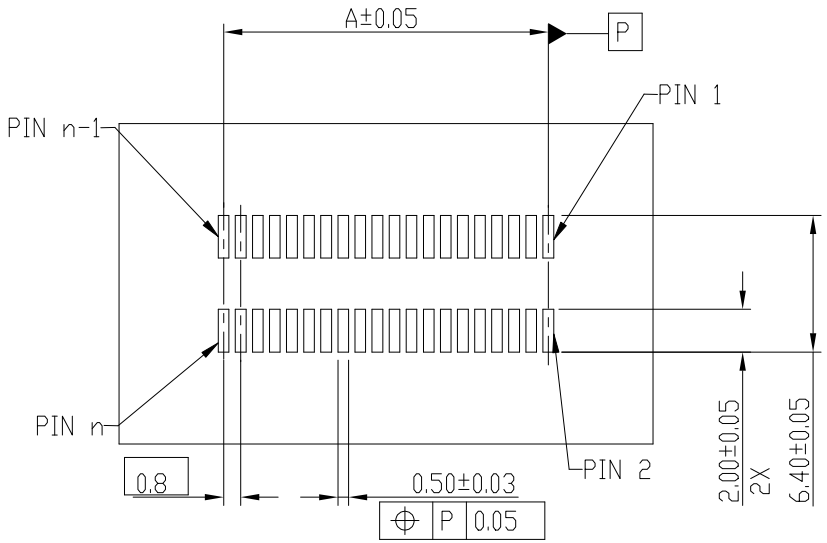

RECOMMENDED PCB LAYOUT WITHOUT PEGS AND HOLDDOWN

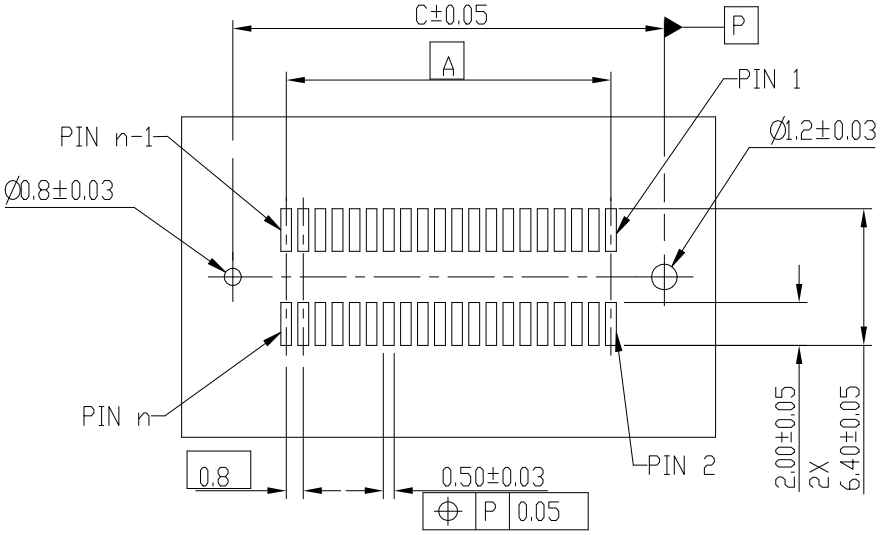

RECOMMENDED PCB LAYOUT WITH PEGS
FOR NO. OF POSITION 2X10, 2X20, 2X30, 2X40, 2X50, 2X60

RECEPTACLE 1

mat'l. code				surface ISO 1302	tolerance ISO 406 ISO 1101	projection	product family BERGSTAK		
ltr	ecn no	dr	date	tolerances unless otherwise specified			title RECEPTACLE ASSY BERGSTAK 0.8MM		
D				angles	linear .0±.2	mm			
				X°±2°	.00±.15				
					.000±.10	scale 1:1			
				dr	Bob Gu 07/05/17	Amphenol FCi	dwg no 10144517	sheet 3 of 7	size A3
				engr	Alan Ni 11/30/22				
				chr	LQ Lei 11/30/22				
				appd	Tim Yao 11/30/22		type Product Customer Drawing		

sheet index	revision	A	B	C	D
	sheet	1~7	1~7	1	1~7

form: A3-2016-02-24

© 2016 AFCI
Amphenol FCi
PDS: Rev :D STATUS:Released Printed: Dec 07, 2022
Downloaded From Oneyac.com

PRODUCT NO.	NUMBER OF POSITIONS	DIMENSION		
		A	B	C
10144517-022***	2X10	7.2	13.8	12.2
10144517-042***	2X20	15.2	21.8	20.2
10144517-062***	2X30	23.2	29.8	28.2
10144517-082***	2X40	31.2	37.8	36.2
10144517-102***	2X50	39.2	45.8	44.2

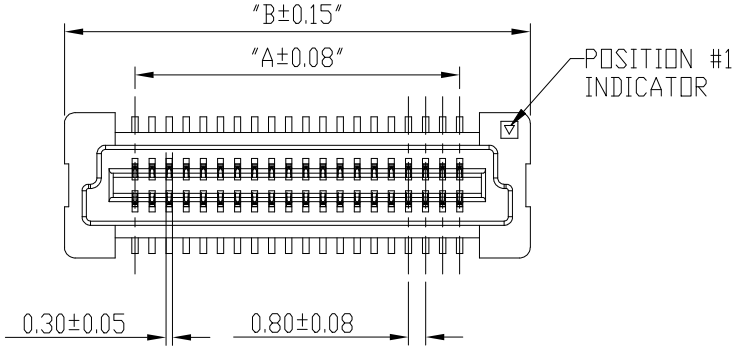

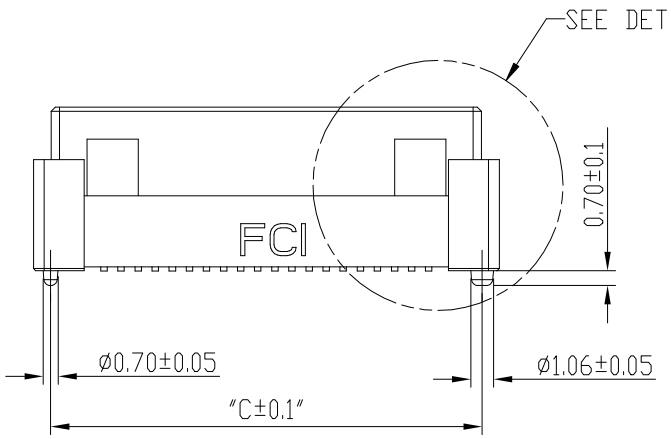

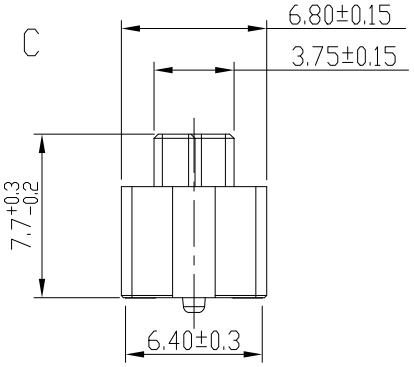

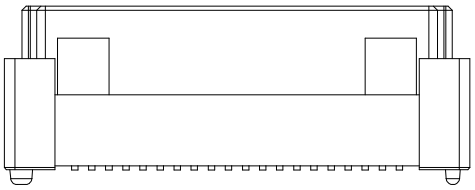

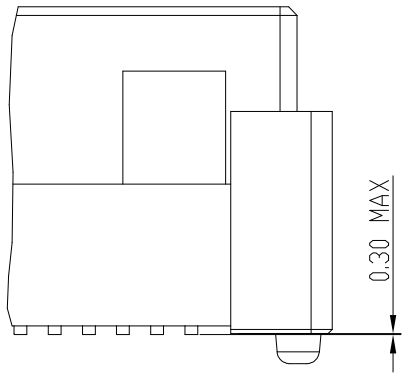

COPLANARITY OF TAIL
0.1 MAX APPLIED TO 2X10 TO 2X50 POS.

DETAIL C
SCALE 8:1

RECEPTACLE 2

mat'l. code				surface ISO 1302	tolerance ISO 406 ISO 1101	projection	product family BERGSTAK
ltr	ecn no	dr	date	tolerances unless otherwise specified			title
D				angles	linear .0±.2 / .00±.15 / .000±.10	mm	RECEPTACLE ASSY BERGSTAK 0.8MM
				X°±2°		scale 1:1	
				dr	Bob Gu 07/05/17	Amphenol FCi	dwg no 10144517 sheet 4 of 7 size A3
				engr	Alan Ni 11/30/22		
				chr	LQ Lei 11/30/22		
				appd	Tim Yao 11/30/22		type Product Customer Drawing
sheet index	revision	A	B	C	D		
	sheet	1~7	1~7	1	1~7		

form: A3-2016-02-24

© 2016 AFCI
Amphenol FCi
Printed: Dec 07, 2022
STATUS:Released
PDS: Rev :D
Downloaded From Oneyac.com

PRODUCT NO.	NUMBER OF POSITIONS	DIMENSION		
		A	B	C
10144517-023***	2X10	7.2	13.8	12.2
10144517-043***	2X20	15.2	21.8	20.2
10144517-063***	2X30	23.2	29.8	28.2
10144517-083***	2X40	31.2	37.8	36.2
10144517-103***	2X50	39.2	45.8	44.2

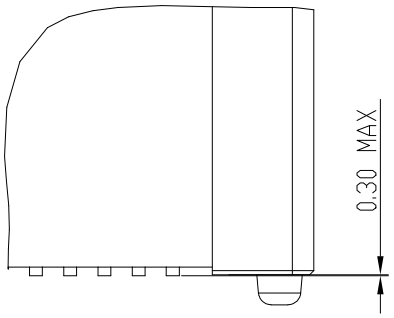

COPLANARITY OF TAIL
0.1 MAX APPLIED TO 2X10 TO 2X50 POS

DETAIL E
SCALE 8:1

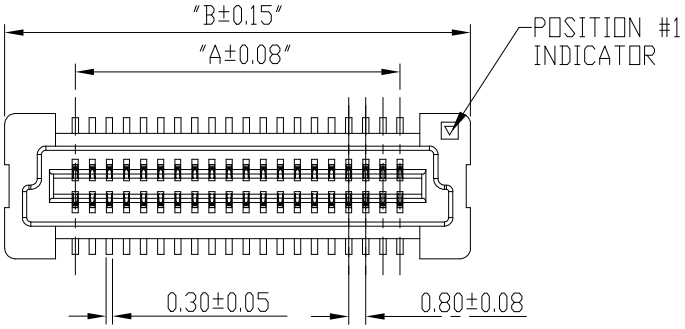

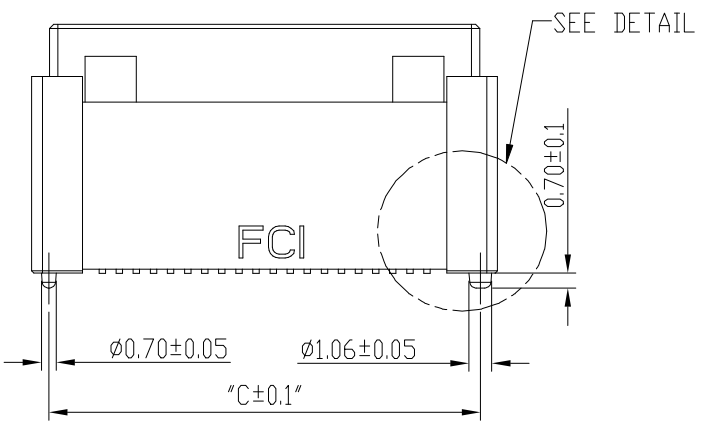

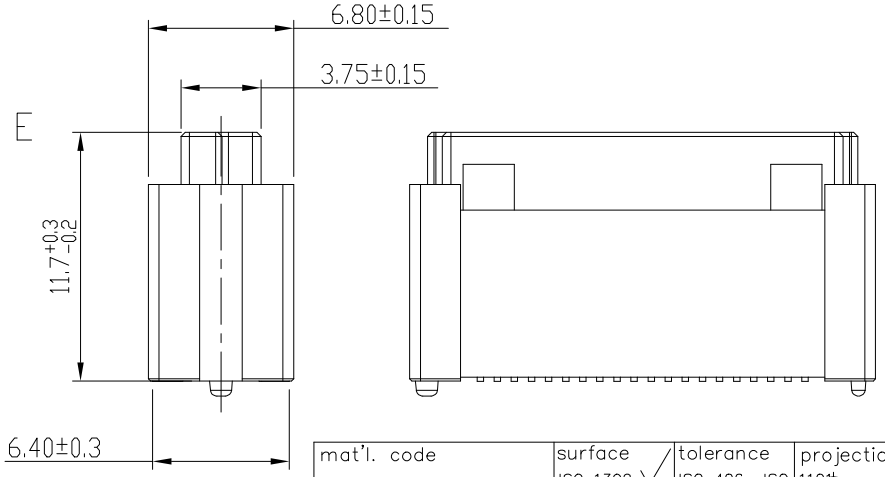

RECEPTACLE 3

mat'l. code				surface ISO 1302		tolerance ISO 406		projection ISO 1101		product family BERGSTAK					
ltr	ecn no	dr	date	tolerances unless otherwise specified						title RECEPTACLE ASSY BERGSTAK 0.8MM					
D				angles	linear	.0±.2		mm							
						.00±.15									
				X°±2°		.000±.10		scale 1:1							
				dr	Bob Gu	07/05/17				dwg no 10144517	sheet 5 of 7			size A3	
				engr	Alan Ni	11/30/22									
				chr	LQ Lei	11/30/22									
				appd	Tim Yao	11/30/22				type Product Customer Drawing					
sheet index	revision	A	B	C	D										
	sheet	1~7	1~7	1	1~7										

form: A3-2016-02-24

© 2016 AFCI
Amphenol FCi
PDS: Rev :D STATUS:Released Printed: Dec 07, 2022
Downloaded From Oneyac.com

PRODUCT NO.	NUMBER OF POSITIONS	DIMENSION		
		A	B	C
10144517-024***	2X10	7.2	13.8	12.2
10144517-044***	2X20	15.2	21.8	20.2
10144517-064***	2X30	23.2	29.8	28.2
10144517-084***	2X40	31.2	37.8	36.2
10144517-104***	2X50	39.2	45.8	44.2

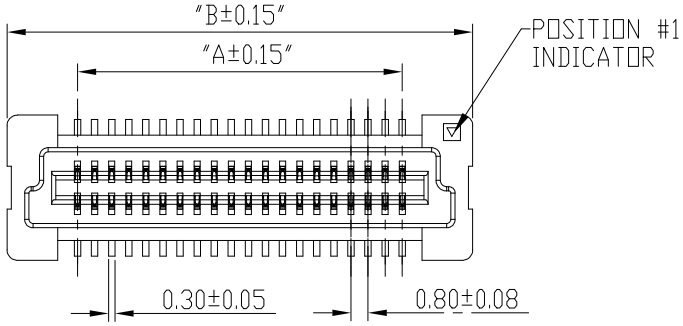

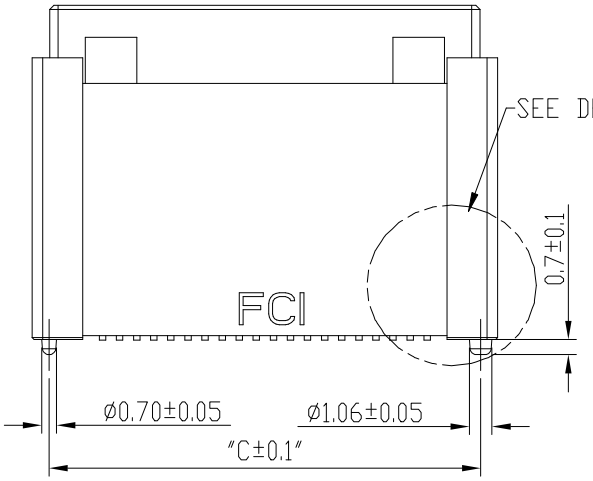

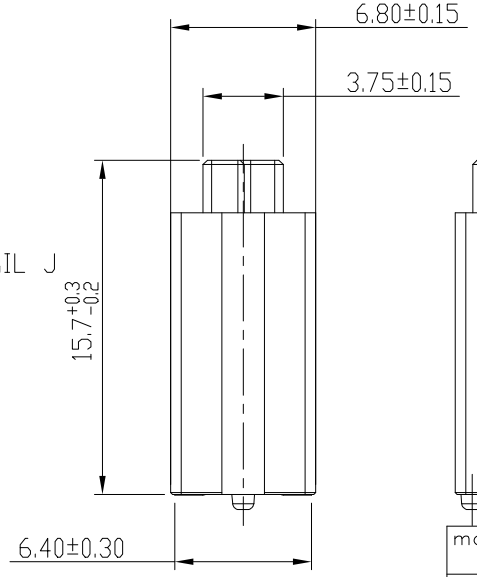

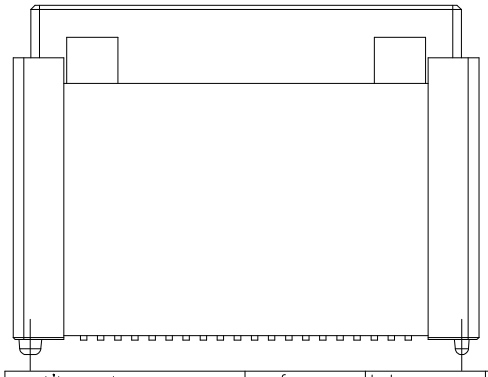

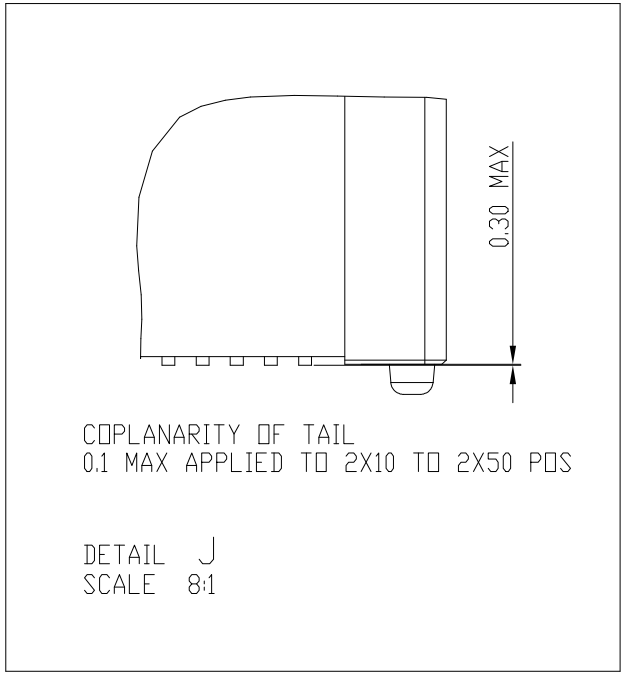

RECEPTACLE 4

mat'l. code			surface ISO 1302	tolerance ISO 406 ISO 1101	projection
ltr	ecn no	dr	date	tolerances unless otherwise specified	
D				angles	linear .0±.2 / .00±.15 / .000±.10
				X°±2°	mm
					scale 1:1
				dr Bob Gu	07/05/17
				engr Alan Ni	11/30/22
				chr LQ Lei	11/30/22
				appd Tim Yao	11/30/22

sheet index	revision	A	B	C	D
	sheet	1~7	1~7	1	1~7

product family: BERGSTAK

title: RECEPTACLE ASSY BERGSTAK 0.8MM

dwg no: 10144517 — sheet 6 of 7 — size A3

type: Product Customer Drawing

Amphenol FCi

form: A3-2016-02-24

© 2016 AFCI

Downloaded From Oneyac.com

PDS: Rev :D STATUS:Released Printed: Dec 07, 2022

RECEPTACLE 2 & 3 & 4

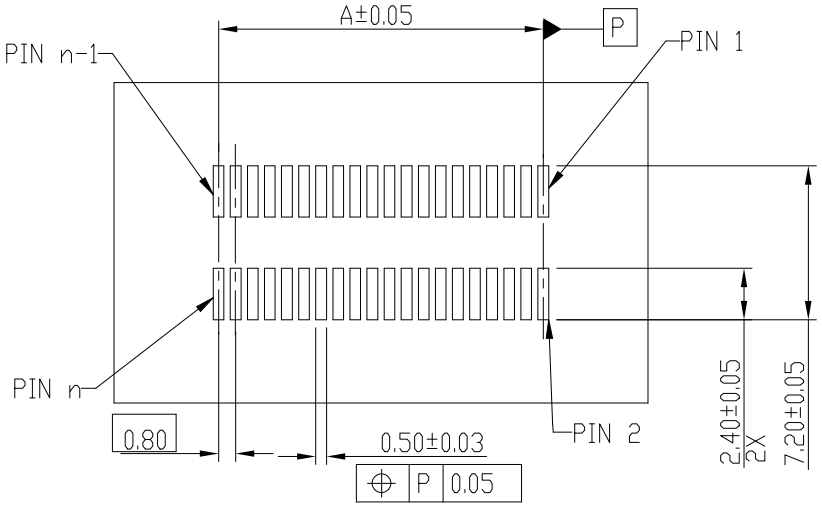

RECOMMENDED PCB LAYOUT WITHOUT PEGS AND HOLDDOWN

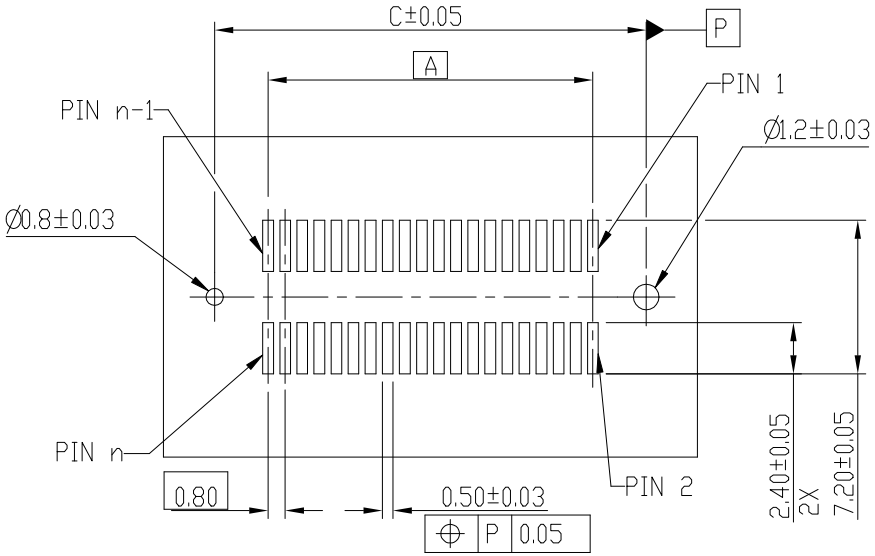

RECOMMENDED PCB LAYOUT WITH PEGS
FOR NO. OF POSITION 2X10, 2X20, 2X30, 2X40, 2X50

mat'l. code				surface ISO 1302		tolerance ISO 406 ISO		projection 1101	product family BERGSTAK
ltr	ecn no	dr	date	tolerances unless otherwise specified					title
D				angles	linear	.0±.2		mm	RECEPTACLE ASSY BERGSTAK 0.8MM
				X°±2°		.00±.15			
						.000±.10		scale 1:1	
				dr	Bob Gu	07/05/17			dwg no 10144517 sheet 7 of 7 size A3
				engr	Alan Ni	11/30/22			
				chr	LQ Lei	11/30/22			
				appd	Tim Yao	11/30/22			type Product Customer Drawing
sheet index	revision	A	B	C	D				
	sheet	1~7	1~7	1	1~7				

© 2016 AFCI

Downloaded From Oneyac.com

PDS: Rev :D STATUS:Released Printed: Dec 07, 2022

单击下面可查看定价，库存，交付和生命周期等信息

>>Amphenol(安费诺)

Downloaded From Oneyac.com