Amphenol PCDSZ
ORIGINAL
PDF Format
R&D

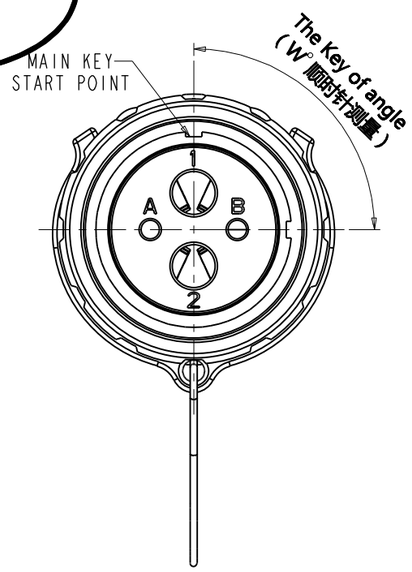

A,B HOLES FOR ∅1.0 INTERLOCK PIN
1~2 HOLES FOR ∅3.0 POWER PIN

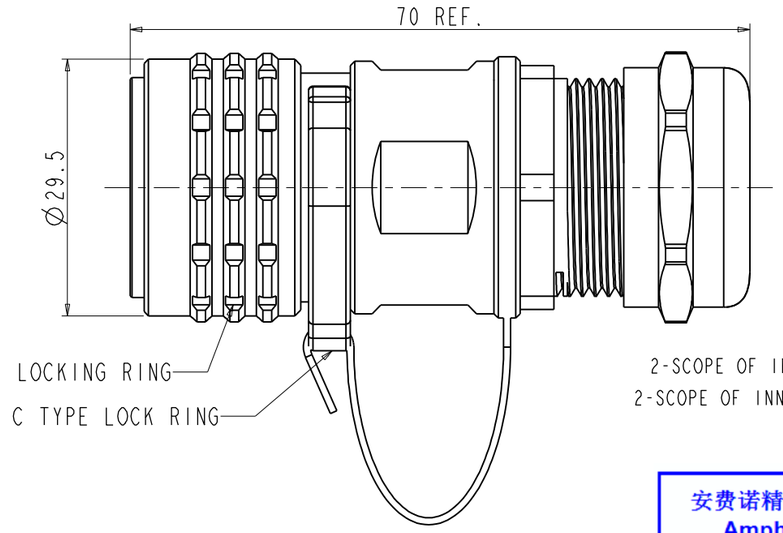

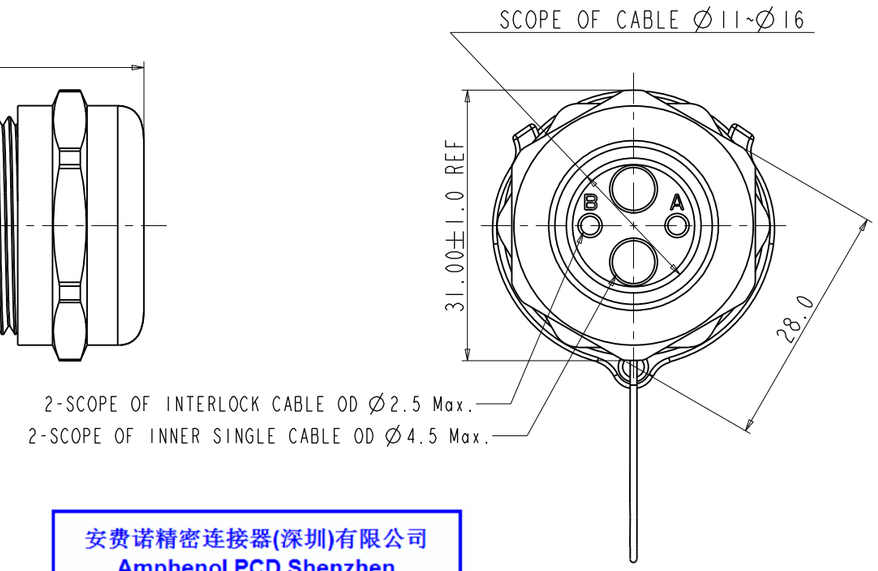

安费诺精密连接器(深圳)有限公司
Amphenol PCD Shenzhen
受 控 文 件
2018 年2月5日

NOTES:
1. FINISHED PRODUCT DOES HAVE NOT THE PIN, NEED TO BUY SEPARATE.
2. THE POWER PIN P/N FOR 4MM^2 CABLE: HVG30M4, USE LEVEL: 2PCS
   THE POWER PIN P/N FOR 2.5MM^2 CABLE: HVG30M2, USE LEVEL: 2PCS
3. THE INTERLOCK PIN P/N: HVG20M1, USE LEVEL: 2PCS
4. WIHT C TYPE LOCK RING AND DUST CAP.
5. TORQUE: 5~8N*M
6. THE SCOPE OF CABLE OD=∅11~∅16
7. TECHNICAL DATA TABLE

CURRENT RATE (4mm^2 CABLE)	32A @ AMBIENT 70° C	+
CURRENT RATE (2.5mm^2 CABLE)	23A @ AMBIENT 70° C	+
UL RATING VOLTAGE (OVERVOLTAGE CATEGORY II POLLUTION DEGREE 2)	800V DC	+
OPERATING TEMPERATURE	-40~125° C	
DIELECTRIC WITH STANDING VOLTAGE	3000V AC	+
INSULATION RESISTANCE	2000MΩ MIN. 25° C, NO CABLE	+
DURABILITY	500 CYCLES	◎
SHIELDING	YES	◎
WATERPRROF (MATED CONDITION)	IP 67	+
AMBIENT TEMPERATURE	-40~70° C	
TECHNICAL DESCRIPTION	TECHNICAL DATA	FEATURE

8. PART NUMBER DESCRIPTION:
HVG1P402MC XX
② KEY OF CODING OPTION
XR: KEY X & RED(w° =270°)
YY: KEY Y & YELLOW(w° =315°)
ZB: KEY Z & BLUE(w° =90°)
WG: KEY W & GREEN(w° =45°)
NO CODE: NO KEY & BLACK(w° =0°)
X : KEY X & BLACK(w° =270°)
Y : KEY Y & BLACK(w° =315°)
Z : KEY Z & BLACK(w° =90°)
W : KEY W & BLACK(w° =45°)
XB: KEY X & BLUE(w° =270°)
YB: KEY Y & BLUE(w° =315°)
ZR: KEY Z & RED(w° =90°)

ANGLE CODE	ANGLE OF KEY(W°)	COLOR CODE	COLOR OF LOCKING RING	P/N(FOR EXAMPLE)
NO CODE	0°	NO CODE	BLACK	HVG1P402MC
X	270°	R	RED	HVG1P402MC X R
Y	315°	Y	YELLOW	HVG1P402MC Y Y
Z	90°	B	BLUE	HVG1P402MC Z B
W	45°	G	GREEN	HVG1P402MC W G
X	270°	NO CODE	BLACK	HVG1P402MC X
Y	315°			HVG1P402MC Y
Z	90°			HVG1P402MC Z
W	45°			HVG1P402MC W
X	270°	B	BLUE	HVG1P402MC X B
Y	315°			HVG1P402MC Y B
Z	90°	R	RED	HVG1P402MC Z R

9. SCOPE OF INNER SINGLE CABLE OUTSIDE DIAMETER :
2.5 &4.0 mm^2 OD 4.5 Max.
INTERLOCK CABLE OD 2.5 Max.(0.5~0.75mm^2 CABLE)

DIMENSIONS	TOLERANCES	PROJECTION		TITLE
ANSI Y14.5M UNITS: MM Pro/E FILE	.X ±0.5 .XX ±0.05 ANGLES ±0.5°	◎	ENGR	TWO CORE PLUG ASSEMBLY WITH INTERLOCK
ORIGINAL NOT FOR CUSTOMER DISTRIBUTION	THIS DOCUMENT CONTAINS PROPRIETARY INFORMATION WHICH IS THE CONFIDENTIAL PROPERTY OF AMPHENOL PCD SHENZHEN		CHKD APPD	SIZE A3 / DWG NO. C-HVG1P402MCXX / REV 2
				CODE: 58982 / SCALE: 3:2 / SHEET 1 OF 1

C-HVG1P402MCXX

C-HVG1P402MCXX

Downloaded From Oneyac.com

单击下面可查看定价，库存，交付和生命周期等信息

>>Amphenol(安费诺)

Downloaded From Oneyac.com