REVISIONS					
REV	ECO	DESCRIPTION	DATE	BY	APPR
A1	--	RELEASE NEW DRAWING	20JUN18	JONY	TOMMY
A2	--	REVISED DRAWING	10JUL20	JHEAD	DH

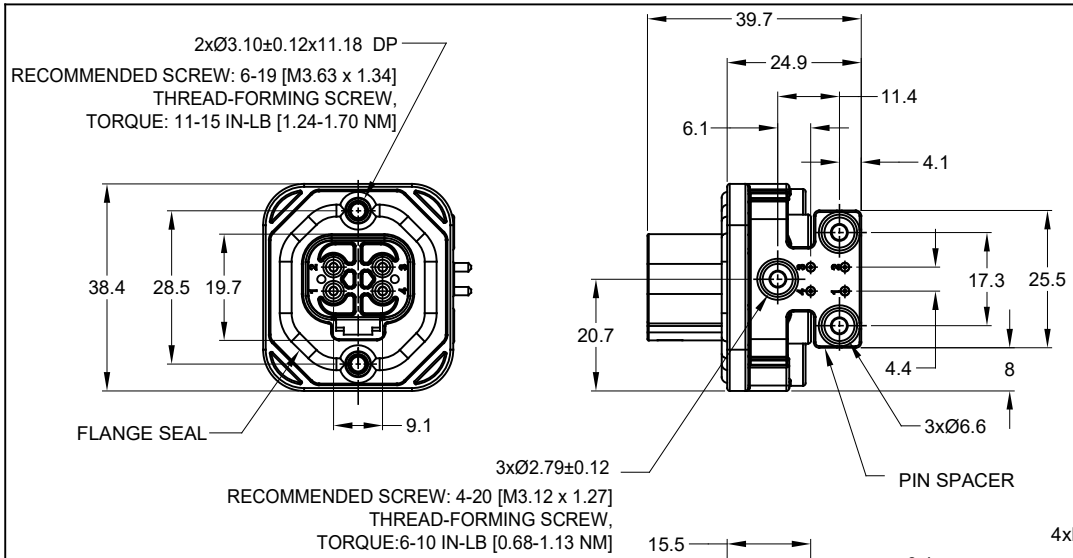

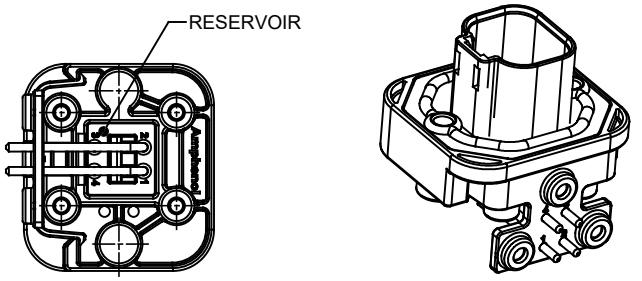

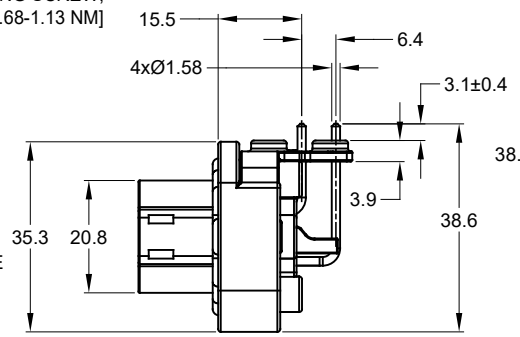

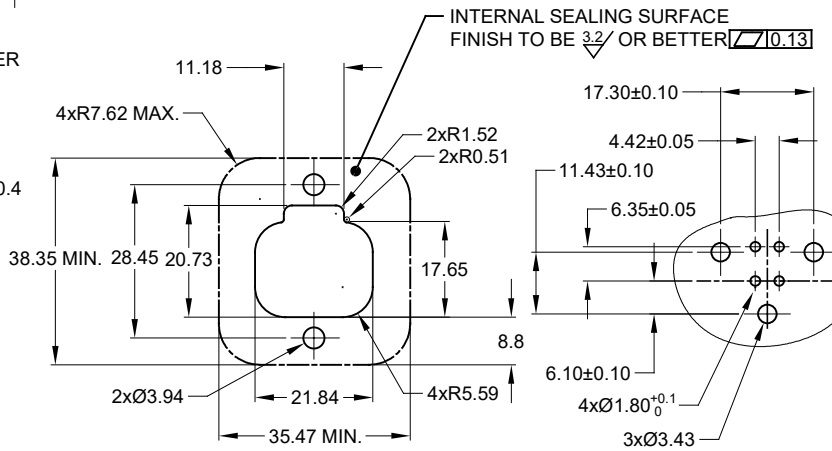

RECOMMENDED PANEL CUTOUT

RECOMMENDED PCB LAYOUT

NOTES: UNLESS OTHERWISE SPECIFIED

1. MATERIAL:
   HOUSING: THERMOPLASTIC
   SEAL:SILICONE RUBBER
   CONTACT: COPPER ALLOY

2. MODIFICATIONS: FLANGE;PCB MOUNT,RIGHT ANGLE

3. SPECIFICATIONS:
   3.1 CURRENT RATING: 13 AMPS
   3.2 OPERATING TEMPERATURE: -55°C TO +125°C
   3.3 DIELECTRIC WITHSTANDING VOLTAGE: LESS THAN 2 MILLIAMPS CURRENT LEAKAGE @ 1500 VOLTS AC.
   3.4 INSULATION RESISTANCE: 1000 MEGOHMS MIN @ 25°C.
   3.5 MOISTURE RESISTANCE: IP67 (MATED CONDITION)
   3.6 MATING CYCLE DURABILITY: 100 CYCLES
   3.7 RoHS COMPLIANT

4. MATING PART: AT06-4S* PLUG
   (* = MODIFICATIONS)

5. ALL DIMENSIONS ARE FOR REFERENCE USE ONLY.

6. POTTED CONNECTORS SPECIFIED FOR UP TO 5 P.S.I. APPLICATIONS.

AT13-4P-BMXX VARIANTS		
CONTACT PLATING	POTTING OR NOT IN RESERVOIR	PART NUMBER
GOLD	NO POTTING	AT13-4P-BM01
GOLD	POTTING	AT13-4P-BM02
TIN	NO POTTING	AT13-4P-BM03
TIN	POTTING	AT13-4P-BM04

	AT13-4P-BMXX	REF: DT13-4P	
	PART NUMBER	DESCRIPTION	ITEM
QUANTITY	MATERIALS LIST		

UNLESS OTHERWISE SPECIFIED
1) All dimensions are in metric(mm).
2) Tolerances are as follows:
1 PL DEC ±0.30
2 PL DEC ±0.15
3 PL DEC ±0.08
Fractions ±1/64
Angles ±1°
3) Note reference = X

MATERIAL SPECIFICATIONS:

PROCESS SPECIFICATIONS:

NEXT ASS'Y:

SIGNATURES		DATE
DRAWN:	JONY.XIE	20JUN18
CHECKED:	ORION.LI	20JUN18
ENGINEER:		
APPROVAL:	TOMMY.XIE	20JUN18
CUSTOMER:		

THIS DRAWING IS SUPPLIED FOR INFORMATION ONLY. DESIGN FEATURES, SPECIFICATIONS AND PERFORMANCE DATA SHOWN HEREON ARE THE PROPERTY OF THE AMPHENOL CORPORATION. NO RIGHTS OF REPRODUCTION ARE IMPLIED. ALL DIMENSIONS ARE SUBJECT TO NORMAL MANUFACTURING VARIATIONS.

Amphenol
Sine Systems - www.amphenol-sine.com
44724 Morley Drive
Clinton Township, MI 48036

BOARDLOCK PCB MOUNT RECEPTACLE,
4 PIN, RA FLANGE, AT SERIES

SIZE	TYPE	DWG NO:	REVISION
B	C-	AT13-4P-BMXX	A2

SCALE: NONE SHEET 1 OF 1

TITLE: BOARDLOCK PCB MOUNT RECEPT,4PIN,RA FLANGE,AT SERIES
DWG NO: AT13-4P-BMXX
REV: A2
SH: 1
OF: 1

Downloaded From Oneyac.com

单击下面可查看定价，库存，交付和生命周期等信息

>>Amphenol(安费诺)

Downloaded From Oneyac.com