JW5520S

Current Programmable, CC/CV, Synchronous Step-up Boost Converter with Output Disconnect

Preliminary Specifications Subject to Change without Notice

DESCRIPTION

The JW®5520S is a synchronous high-efficiency, boost converter with true output disconnection. The device adopts constant-off-time (COT) control topology.

The device can start up from an input voltage as low as 1.2V. The input switch peak current can be programmable up to 9A and the output average load current limit can be programmable by external resistors.

The typical operation frequency of JW5520S is 600kHz, which allows smaller inductor and capacitors to achieve a small solution size.

During light load condition, PFM is engaged to maintain the maximum efficiency.

JW5520S guarantees robustness with output short circuit protection and thermal shutdown.

Company's Logo is Protected, "JW" and "JOULWATT" are Registered Trademarks of JoulWatt technology Inc.

FEATURES

- 1.2V Minimum Start-up Input Voltage
- 1.2V to 5.5V Input Voltage Range
- 2.5V to 5.5V Output Voltage Range
- Support 5V/3.5A Output from 2.8V Input
- Up to 9A Programmable Switch Peak Current Limit
- Programmable Average Load Current Limit
- 600kHz Pseudo-Constant Frequency Switching
- Low Quiescent Current: <40uA
- High Efficiency over Full Load Range
- True Output Disconnection from Input
- Thermal Shutdown and Output Short Circuit Protection
- Package: QFN2x2-14

APPLICATIONS

- Battery Powered Systems
- Power Banks, Juice Packs, Battery Back-Up
- Electronic Cigarettes
- Consumer Electronic Accessories
- USB Power Supplies

TYPICAL APPLICATION

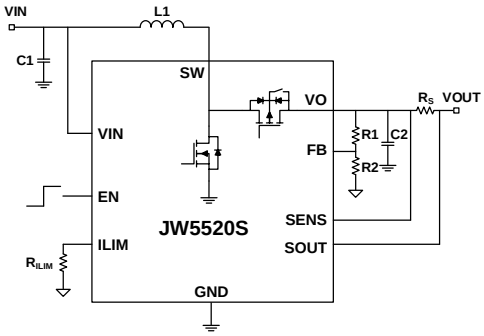

This document contains information of a product under development.
JoulWatt reserves the right to change this product without notice.

Downloaded From Oneyac.com

ORDER INFORMATION

DEVICE[1)]	PACKAGE	TOP MARKING[2)]
JW5520SQFNAE#TRPBF	QFN2X2-14	JWFA□ YW□□□

Notes:

1) JW□□□□ # TRPBF
- PB Free
- Tape and Reel(If" TR" is not shown, it means tube)
- Package Code
- Part No.

2) Line1: JW□□□
- Internal control code
- Product code
- Joulwatt LOGO

Line2: YW□□□
- Lot number
- Week code
- Year code

PIN CONFIGURATION

TOP VIEW

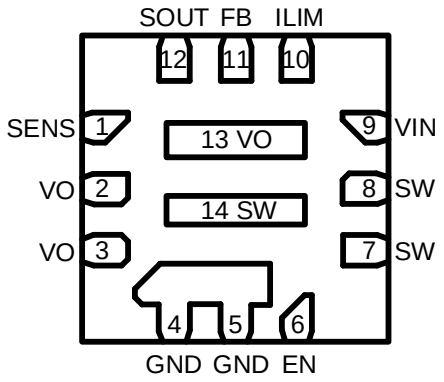

QFN2x2-14

ABSOLUTE MAXIMUM RATING[1)]

All Pins ..... -0.3V to 6.5V
JunctionTemperature[2)] 150ºC
Lead Temperature 260ºC
Storage Temperature ..... -65ºC to +150ºC

ESD Ratings

Human-body model (HBM), per ANSI/ESDA/JEDEC JS-001[3)] .....±2000V
Charged-device model (CDM), per JEDEC specification JESD22-C101[4)] .....±500V

RECOMMENDED OPERATING CONDITIONS[5)]

Input Voltage VIN ..... 1.2V to 5.5V
Operation Junction Temperature (T_J) ..... -40ºC to +125ºC

JoulWatt® Proprietary Information. Patent Protected.
Unauthorized Photocopy and Duplication Prohibited.
This document contains information of a product under development.
JoulWatt reserves the right to change this product without notice.

Downloaded From Oneyac.com

Ambient Temperature Range …..... -40ºC to +85ºC

THERMAL PERFORMANCE[6)]

	θ_{JA}	θ_{JC}
QFN2x2-14	80	16ºC/W

Note:

1) Exceeding these ratings may damage the device. These stress ratings do not imply function operation of the device at any other conditions beyond those indicated under RECOMMEND OPERATION CONDITIONS.

2) The JW5520S includes thermal protection that is intended to protect the device in overload conditions. Continuous operation over the specified absolute maximum operating junction temperature may damage the device.

3) JEDEC document JEP155 states that 500 V HBM allows safe manufacturing with a standard ESD control process. Manufacturing with less than 500 V HBM is possible with the necessary precautions. Pins listed as ±2000 V may actually have higher performance.

4) JEDEC document JEP157 states that 250 V CDM allows safe manufacturing with a standard ESD control process. Manufacturing with less than 250 V CDM is possible with the necessary precautions. Pins listed as ±500 V may actually have higher performance.

5) The device is not guaranteed to function outside of its operating conditions.

6) Measured on JESD51-7, 4-layer PCB.

This document contains information of a product under development.
JoulWatt reserves the right to change this product without notice.
Downloaded From Oneyac.com

ELECTRICAL CHARACTERISTICS

VIN=3.3V, TA=25°C, unless otherwise stated

Item	Symbol	Condition	Min.	Typ.	Max.	Units
General parameters						
Input Voltage Range	V_{IN}		1.2		5.5	V
VIN UVLO Threshold	V_{IN_UVLO}	V_{IN} rising		0.9		V
		V_{IN} falling		0.65		V
EN Logic High Threshold[5)]	V_{EN_H}	$V_{IN} \leq 2.3V$, EN rising		0.74		V
EN Logic High Threshold	V_{EN_H}	$V_{IN} > 2.3V$, EN rising		1.2	1.3	V
EN Logic Low Threshold[5)]	V_{EN_L}	$V_{IN} \leq 2.5V$, EN falling	0.4	0.54		V
EN Logic Low Threshold	V_{EN_L}	$V_{IN} > 2.5V$, EN falling	0.4	1.08		V
EN Input Current	I_{EN}	Connect to V_{IN}			50	nA
Quiescent Current into VO pin	I_Q	$V_{EN} = V_{IN} = 3.3V$, $V_O = 5V$, $V_{FB} = 1.3V$, no load			40	μA
Top Switch On-Resistance	R_{dsTG}			14		mΩ
Bottom Switch On-Resistance	R_{dsBG}			8		mΩ
Shutdown Current	I_{SD}	$V_O = V_{EN} = 0V$			0.1	μA
Operation Frequency	F_{SW}			600		kHz
Minimum ON time	T_{ON_MIN}			200		ns
Feedback Voltage Reference	V_{FB}			1200		mV
Feedback Input Current	I_{FB}				50	nA
Switch Peak Current Limit	I_{SW_LIM}			9		A
Output Current Limit	I_{OLIM}	$R_s = 8m\Omega$		3.75		A
Protection						
Output OVP Threshold	V_{O_OVP}	V_O rising		6		V
		V_O falling		5.5		
OCP Hiccup ON Time	T_{hiccup_on}			10		ms
OCP Hiccup OFF Time	T_{hiccup_off}			2		s
Thermal Shutdown Threshold[5)]	T_{SHUT}			150		°C
Thermal Recovery Threshold[5)]	T_{REC}			130		°C

Notes:

5) Guaranteed by design.

JoulWatt® Proprietary Information. Patent Protected.
Unauthorized Photocopy and Duplication Prohibited.
This document contains information of a product under development.
JoulWatt reserves the right to change this product without notice.

Downloaded From Oneyac.com

PIN DESCRIPTION

Pin No.	Name	Description
1	SENS	Load Current Sense Pin. Connect a load sense resistor between this pin and SOUT pin to set the maximum load current.
2, 3, 13	VO	Output Pin.
4,5	GND	Power Ground.
6	EN	Chip Enable Control Input.
7, 8, 14	SW	Power Switch Output.
9	VIN	Power Supply Input.
10	ILIM	Switch Peak Current Limit Set Pin.
11	FB	Feedback Input to Error Amplifier. Connect resistor divider tap to this pin.
12	SOUT	Load Current Sense Pin. Connect a load sense resistor between this pin and SENS pin to set the maximum load current.

BLOCK DIAGRAM

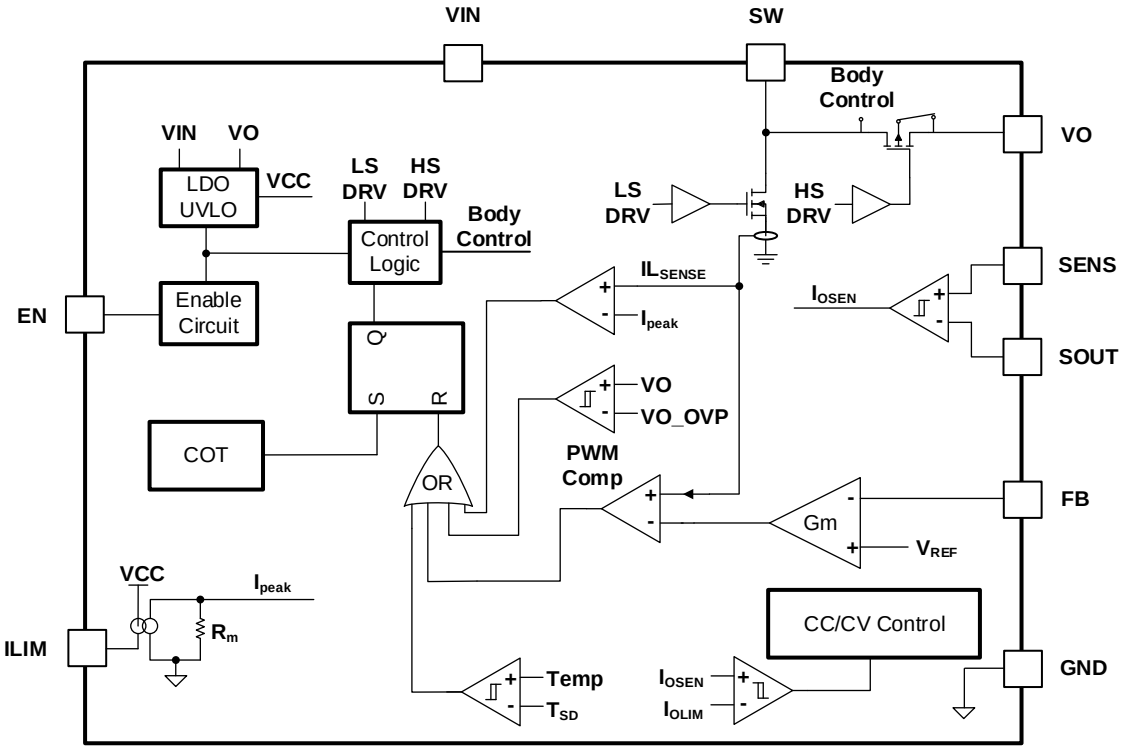

This document contains information of a product under development.
JoulWatt reserves the right to change this product without notice.

Downloaded From Oneyac.com

TPICAL PERFORMANCE CHARACTERISTICS

V_{IN}=1.2V~4.8V, V_O=5V, L=1.5uH, C_O=2x22uF+100nF, T_A = +25°C, unless otherwise noted

Efficiency vs. Load Current

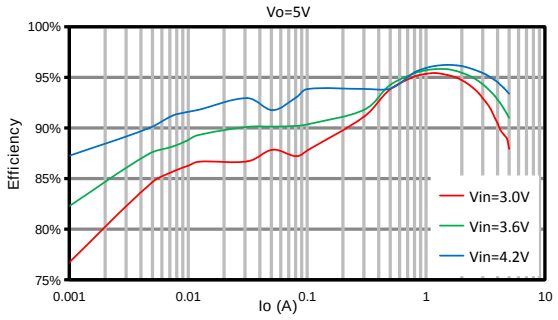

ΔVout vs. Load Current

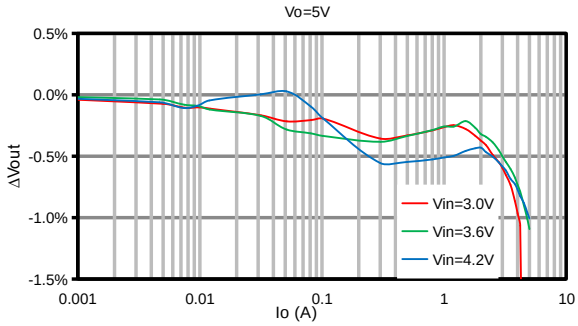

Output Current Limit Vout vs. Load Current

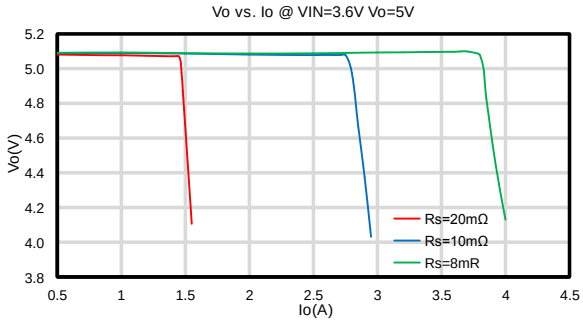

VIN Power On

V_{IN}=3.6V, V_O=5V, I_O=1A

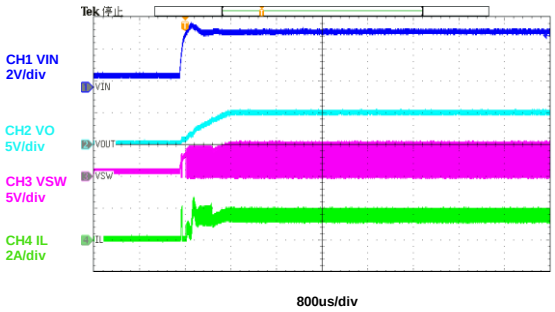

VIN Power off

V_{IN}=3.6V, V_O=5V, I_O=1A

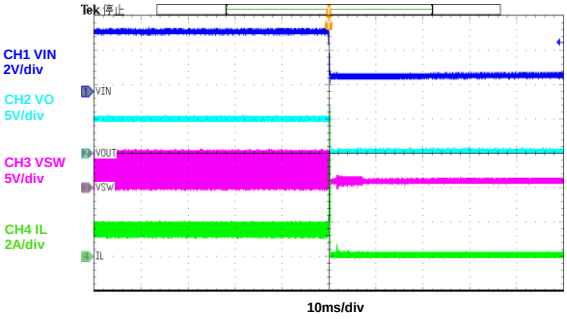

This document contains information of a product under development.
JoulWatt reserves the right to change this product without notice.

Downloaded From Oneyac.com

EN Power On

V_{IN}=3.6V, V_O=5V, I_O=1A

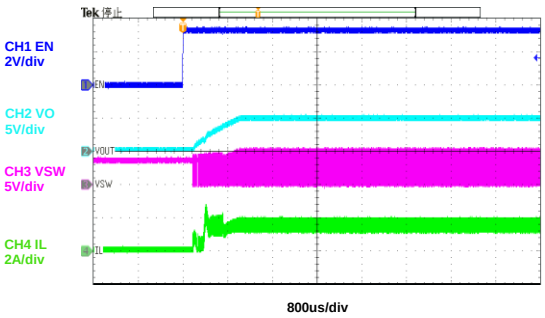

EN Power off

V_{IN}=3.6V, V_O=5V, I_O=1A

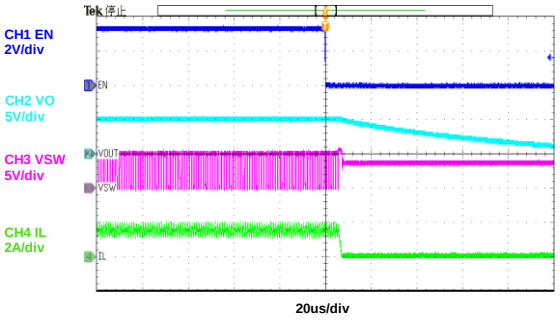

Steady State

V_{IN}=3.3V, V_O=5V, I_O=2A

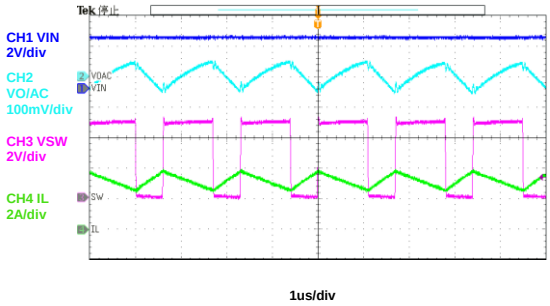

Steady State

V_{IN}=3.3V, V_O=5V, I_O=0A

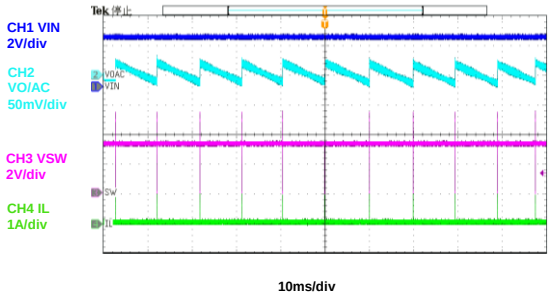

Line Transient

V_{IN}=2.5V→4V→2.5V, V_O=5V, I_O=2A

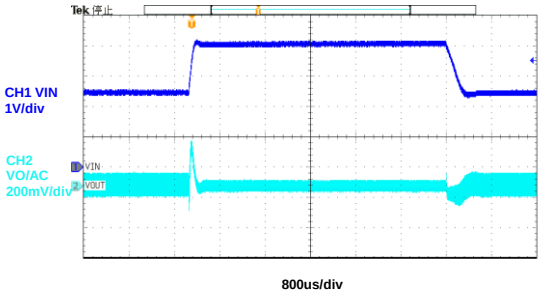

Line Sweep

V_{IN}=1.6V→4V→1.6V, V_O=5V, I_O=1A

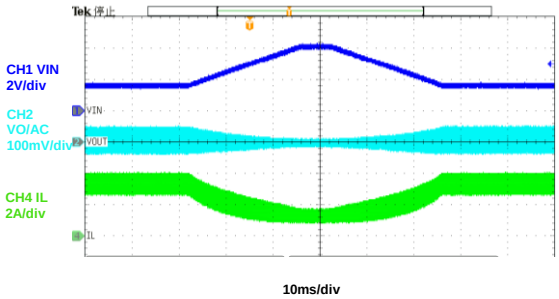

Load Transient

V_{IN}=3.6V, V_O=5V,I_O=0.2A→2.5A→0.2A, I_{RAMP}=200mA/us

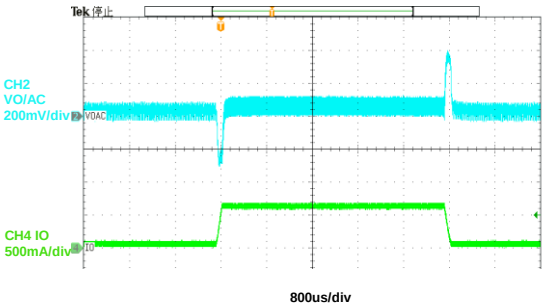

Load Sweep

V_{IN}=3.6V, V_O=5V,I_O=0A→1A→0A, I_{RAMP}=1mA/us

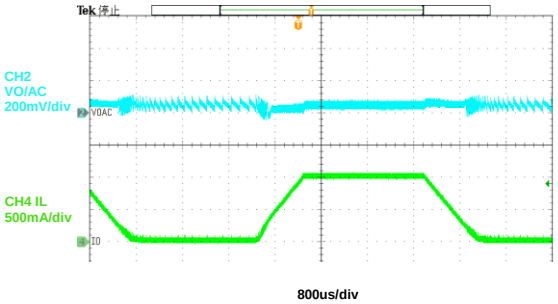

This document contains information of a product under development.
JoulWatt reserves the right to change this product without notice.

Downloaded From Oneyac.com

Output Short Protection (Entry)

V_{IN}=3.6V, V_O=5V, I_O=1A → Output Short

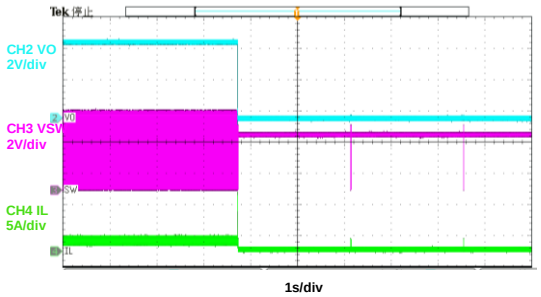

Output Short Protection (Recover)

V_{IN}=3.6V, V_O=5V, Output Short → I_O=0.5A

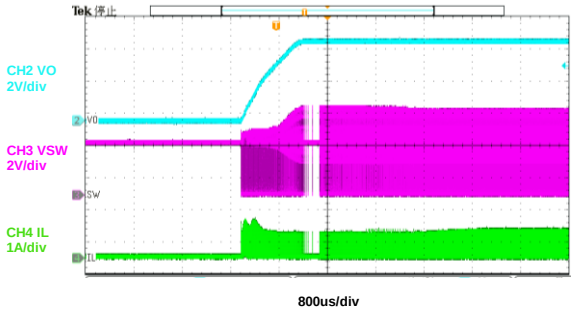

This document contains information of a product under development.
JoulWatt reserves the right to change this product without notice.

Downloaded From Oneyac.com

FUNCTIONAL DESCRIPTION

The JW5520S is a synchronous, high-efficiency, boost converter with true output disconnection. It is designed to operate from an input voltage range between 1.2V and 5.5V with up to 9A peak switch current limit. The output current limit can be programmable through external resistor.

PFM is engaged to maintain high efficiency at light load. In PFM mode, switching frequency is continuously controlled in proportion to the load current. Switch frequency decreases when load current drops to increase power efficiency at light load by reducing switching loss and minimizing the circuit power dissipation.

The JW5520S guarantees robustness with short-circuit protection and thermal shutdown.

Start-Up

When the device is enabled, the JW5520S can start up from a voltage as low as 1.2V.

If the input voltage is lower than 2.2V, the JW5520S starts in pre-boost mode. During this phrase, converter switches to build up the output voltage preliminarily and the switching frequency is controlled by an internal clock, which is not precise. Once the output voltage is above 2.2V, all the internal control circuit is powered up, and the converter enters normal boost mode, in which the JW5520S steps up the voltage to the setting value by following an internal ramp up reference voltage.

If the input voltage is higher than 2.2V, the JW5520S starts in down mode to build up the output voltage, during which the top switch body diode is reversed, and its gate is connected to VIN. Once the output voltage is higher than input voltage, the converter enters normal boost mode.

Device Enable

The JW5520S starts operation when EN pin is pulled high and starts up with a soft-start process. Pulling EN pin low can force the device into shutdown mode with a current consumption of typically 0.1μA. In shutdown mode, the chip stops switching and all the internal control circuit is off, and the load is truly disconnected from the input.

Output Disconnection

A true output disconnection between input and output is implemented in the device. This feature guarantees robustness with short-circuit protection to prevent the device from being damaged by inrush current. It can also limit the output current at start-up.

Output Voltage

The output voltage is set by an external feedback resistive divider. The feedback signal is compared with internal precision 1.2V voltage reference by an error amplifier. The output voltage can be given by the equation:

$$V_O(V) = \frac{1.2V \times (R_1 + R_2)}{R_2}$$

Where R_1 and R_2 are defined in the typical application figure.

Switch Peak Current Limit Setting

To prevent the device from being damaged by a large input peak current, a cycle-by-cycle current limit is adopted in JW5520S. The low side switch is turned off immediately, as soon as the switch current touches the setting limit, which is programmed by a resistor from the ILIM pin to ground. The peak current limit can be given by the formula below:

This document contains information of a product under development.
JoulWatt reserves the right to change this product without notice.
Downloaded From Oneyac.com

$$I_{peak}(A) = 9 - \frac{433}{R_{ILIM}(k\Omega)}$$

where I_{peak} is the switch peak current limit, R_{ILIM} is the resistor between ILIM pin and ground.

Output Current Limit Setting

The JW5520S provides programmable limits of the output current. The SENS and SOUT pin should be configured as figure below:

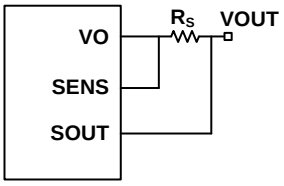

Figure 1. Output current limit setting

The SENS and SOUT pin should be tied to the both ends of the current sensing resistor. Then the limit current can be shown in the equation below:

$$I_{OLIM}(A) = \frac{30mV}{R_S(m\Omega)}$$

where I_{OLIM} is the setting output current limit, R_s is the current sensing resistor.

Constant Output Current Control

When output current touches the setting output current limit, the converter turns down the output voltage to limit the output power. the output voltage can be seen in the figure 2.

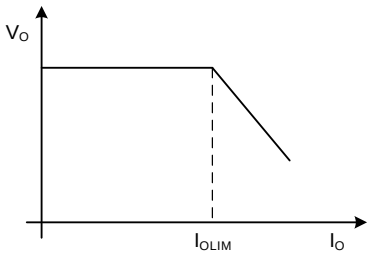

Figure 2. Constant Output Current Control

Down Mode

When the Vin is higher than Vo - 200mV, the device works in down mode. In this mode, the top switch body diode is reversed, and the top switch gate is connected to V_{IN}. The top switch operates in linear mode to bleed the inductor current to avoid the inductor current run away and prevent the SW voltage overshoot. After entering downmode, when the Vin is lower than Vo - 250mV, the device returns boost mode. It is not recommended to operate the JW5520S in down mode for normal work, unless the system performance will not be affected by the temperature rise.

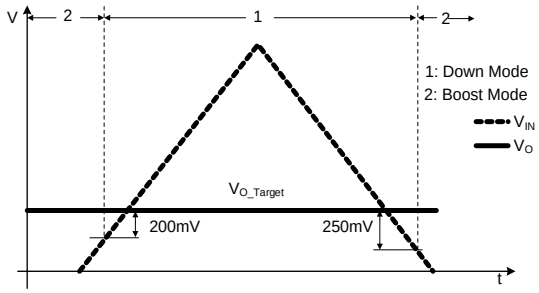

Figure 3. Down Mode and Boost Mode Operation

Thermal Regulation Control

If the junction temperature is higher than 130°C, the device begins to reduce the output voltage in order to prevent the junction temperature from rising further, when the junction temperature rises to 150°C, the device shuts down.

Protection

Over Load and Short Circuit Protection

If the output current touches output current limit, the output current loop begins to work, it decreases output voltage to limit the output power. When the output voltage is less than 0.4V , the peak current is limited to approximate 1 A. For about 10 ms, the device shuts down.

This document contains information of a product under development.
JoulWatt reserves the right to change this product without notice.
Downloaded From Oneyac.com

After the delay time T_{hiccup_off} (typ.2 s), the device attempts to start up again.

Short circuit protection is only valid when the input voltage is below 5.0 V. If the input voltage is higher than 5.0V, a long term short to ground event may damage the device.

Over Voltage Protection

If output voltage is higher than 6V, the device stops switching. Until the output voltage drops below 5.5V, the device resumes switching automatically.

Thermal Shutdown

When the junction temperature of the device rises above T_{SHUT}, the device is forced into shut down mode. When the temperature drops below T_{REC}, the device can be resumed with soft start.

JoulWatt® Proprietary Information. Patent Protected.
Unauthorized Photocopy and Duplication Prohibited.
This document contains information of a product under development.
JoulWatt reserves the right to change this product without notice.

Downloaded From Oneyac.com

APPLICATION INFORMATION

The JW5520S is designed to operate from an input voltage supply range between 1.2V and 5.5V with true output disconnection. The input switch peak current can be programmable up to 9A and the output average load current limit can be programmable by external resistors. The JW5520S operates at a quasi-constant frequency pulse-width modulation (PWM) in moderate to heavy load condition, and the switching frequency is fixed at 600kHz. In light load condition, the converter can operate in the PFM mode to achieve high efficiency over the entire load current range.

Typical Application Circuit

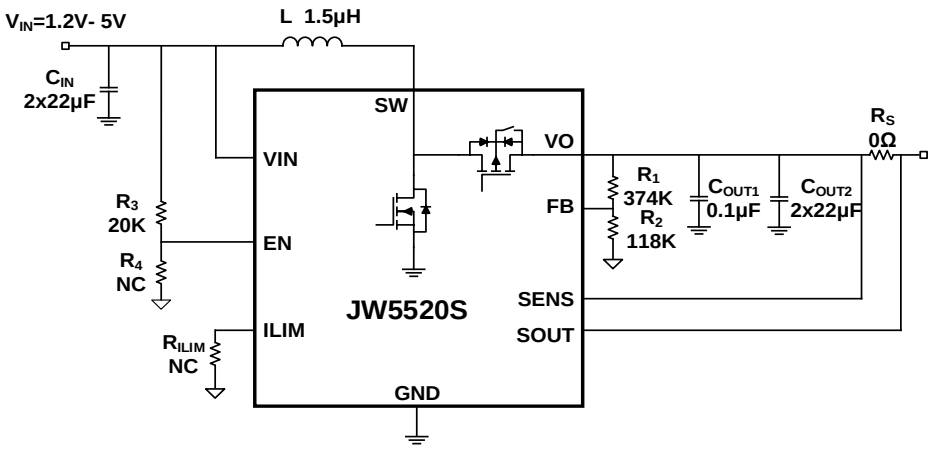

Design Requirements

Table 1. Design Parameters

DESIGN PARAMENTERS	EXAMPLES VALUES
Input voltage range	1.2V ~ 4.8V
Output voltage	5.0V
Output current limit	No
Switch peak current limit	9A

This document contains information of a product under development.
JoulWatt reserves the right to change this product without notice.
Downloaded From Oneyac.com

Setting the Output Voltage

The external resistor divider is used to set the output voltage. Typically, choose R_1 to be between 300kΩ - 800kΩ. Then calculate R_2 with the equation listed below:

$$R_2(k\Omega) = \frac{V_{REF}}{V_{OUT} - V_{REF}} \times R_1(k\Omega)$$

Where V_{REF} is 1.2V, R_1 is the top feedback resistor, an R_2 is the bottom feedback resistor.

Selecting the Input Capacitor

The input capacitor (C_{IN}) is used to maintain the DC input voltage. Low ESR ceramic capacitors are recommended. The input voltage ripple can be estimated with the following equation:

$$\Delta V_{IN}(V) = \frac{V_{IN}}{8 \cdot f_{SW}^2 \cdot L \cdot C_{IN}} \times (1 - \frac{V_{IN}}{V_{OUT}})$$

Where f_{SW} is the switching frequency, and L is the inductor value.

Selecting the Output Capacitor

The output current of the boost converter is discontinuous and therefore requires an output capacitor (C_{OUT}) to supply AC current to the load. For the best performance, low ESR ceramic capacitors are recommended. The output voltage ripple can be estimated with the equation listed below:

$$\Delta V_{OUT}(V) = \frac{V_{OUT}}{f_S \cdot R_L \cdot C_{OUT}} \times (1 - \frac{V_{IN}}{V_{OUT}})$$

Where R_L is the value of the load resistor. Ceramic capacitors with X5R or X7R dielectrics are highly recommended because of their low ESR and small temperature coefficients.

Selecting the Inductor

An inductor is required to transfer the energy between the input source and the output capacitors. An inductor with a larger value results in less ripple current and a lower peak inductor current, reducing stress on the power MOSFET. However, the larger value inductor has a larger physical size, a higher series resistance, and a lower saturation current. For the smaller value inductor, larger current ripple generates higher DCR and ESR conduction losses and higher core loss. Usually, a data sheet of an inductor does not provide the ESR and core loss information. If needed, consult the inductor vendor for detailed information.

For most designs, the inductance value can be calculated with the following equation:

$$L = \frac{V_{IN}(V_{OUT} - V_{IN})}{f_S \cdot V_{OUT} \cdot \Delta I_L}$$

Where ΔI_L is the inductor ripple current. Choose the inductor ripple current to be approximately 20% ~ 50% of the maximum inductor peak current. Ensure that the inductor does not saturate under the worst-case condition. The inductor should have a low series resistance (DCR<10mΩ) to reduce the resistive power loss. The following table lists recommended inductors for this example application.

JoulWatt® Proprietary Information. Patent Protected.
Unauthorized Photocopy and Duplication Prohibited.
This document contains information of a product under development.
JoulWatt reserves the right to change this product without notice.

Downloaded From Oneyac.com

Table 2. Recommended Inductors for the example application

PART NUMBER	L (μH)	DCR MAX (mΩ)	SATURATION CURRENT (A)	SIZE MAX (L x W x H: mm)	VENDOR
74437349015	1.5	8.6	14.5	7.3 x 6.6 x 4.8	Wurth
SPM6550T-1R5M-HZ	1.5	6.49	10.3	7.1 x 6.5 x5.0	TDK

Switching Peak Current Limit Setting

The ILIM resistor (R_{ILIM}) is used to set the inductor switching peak current limit. Calculate R_{ILIM} with the following equation:

$$R_{ILIM}(k\Omega) = \frac{433}{9 - I_{peak}(A)}$$

For example, if the required peak current limit is 8A, then R_{ILIM} is 433kΩ.

Output Current Limit Setting

The resistor (R_s) is used to set the output current limit. Calculate R_s with the following equation:

$$R_s(m\Omega) = \frac{30mV}{I_{OLIM}(A)}$$

For example, if the output current limit is 3A, then R_s is 10mΩ.

PCB Layout Guidelines

Efficient PCB layout is critical for high-frequency switching power supplies. A poor layout can result in reduced performance, excessive EMI, resistive loss, and system instability. For best results, refer to the following figure and follow the guidelines below.

1. Place the output capacitor (C_{OUT2}) as close to VO and GND as possible, Place a 0.1uF capacitor (C_{OUT1}) close to the IC to reduce the PCB parasitical inductance.
2. Keep the connection of VO and GND to the output capacitor short and wide with copper.
3. Place the FB divider R_1 and R_2 as close to FB as possible.
4. Keep the FB trace far away from noise source, such as the SW node (switching node).
5. Place the current limit setting net (R_{ILIM}) close to ILIM pin.
6. Keep the input loop (C_{IN},L,SW pin and GND) as small as possible.
7. Place enough GND vias close to the JW5520S for good thermal dissipation.

Layout Example

The layout example shows as the follow figures.

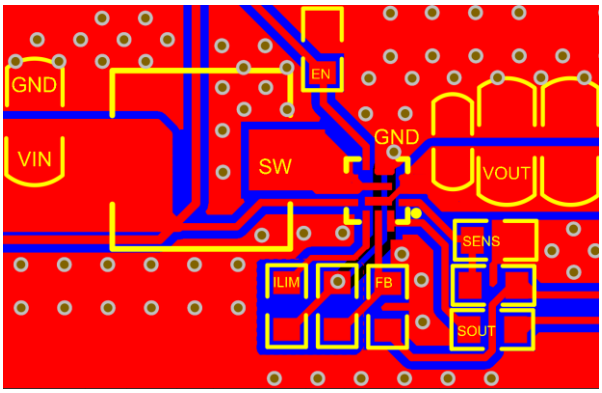

This document contains information of a product under development.
JoulWatt reserves the right to change this product without notice.
Downloaded From Oneyac.com

PACKAGE OUTLINE

QFN2X2-14 UNIT: mm

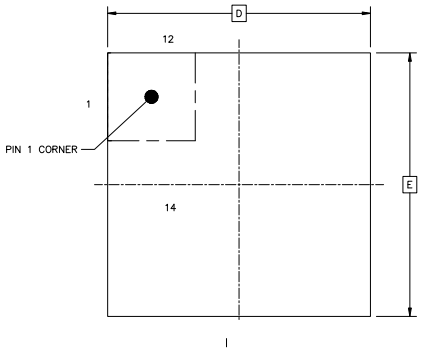

TOP VIEW

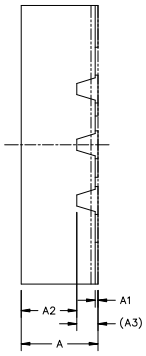

SIDE VIEW

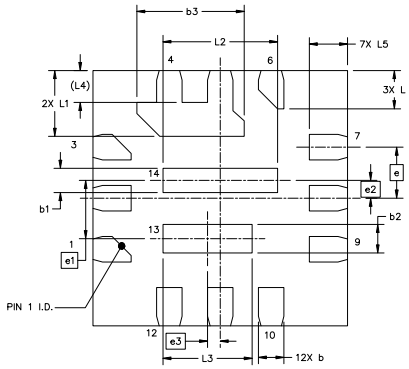

BOTTOM VIEW

SYMBOL	MILLIMETER		
	MIN	NOM	MAX
A	0.50	0.55	0.60
A1	0.00	0.02	0.05
A2	—	0.40	—
A3	0.152 REF		
b	0.15	0.20	0.25
b1	0.14	0.19	0.24
b2	0.174	0.224	0.274
b2	0.793	0.843	0.893
D	2 BSC		
E	2 BSC		
e	0.4 BSC		
e1	0.457 BSC		
e2	0.139 BSC		
e3	0.1 BSC		
L	0.20	0.30	0.40
L1	0.466	0.516	0.566
L2	0.85	0.90	0.95
L3	0.65	0.70	0.75
L4	0.25 REF		
L5	0.25	0.30	0.35

QUADRANT ASSIGNMENTS FOR PIN 1 ORIENTATION IN TAPAE

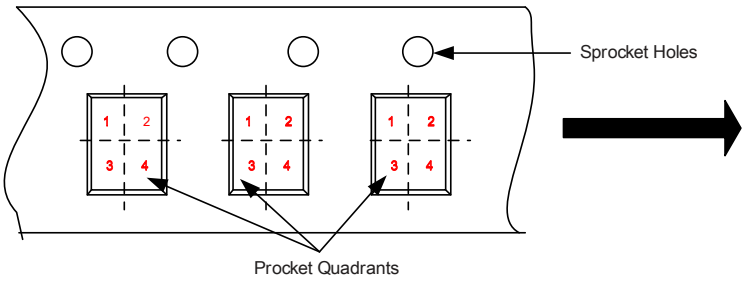

Package Type	Pin1 Quadrant
QFN2X2-14	1

This document contains information of a product under development.
JoulWatt reserves the right to change this product without notice.
Downloaded From Oneyac.com

IMPORTANT NOTICE

- **JoulWatt Technology Inc. reserves the right to make modifications, enhancements, improvements, corrections or other changes without further notice to this document and any product described herein.**
- **Any unauthorized redistribution or copy of this document for any purpose is strictly forbidden.**
- **JoulWatt Technology Inc. does not warrant or accept any liability whatsoever in respect of any products purchased through unauthorized sales channel.**

Copyright © 2021 JW5520S Incorporated.

All rights are reserved by JoulWatt Technology Inc.

Downloaded From Oneyac.com

单击下面可查看定价，库存，交付和生命周期等信息

>>JOULWATT(杰华特)

Downloaded From Oneyac.com