Mcr100 Series
0.8A SCRs
Sensitive Gate SCRs

ShenZhenHanKingyuan
Electronic CO.,Ltd

Downloaded From Oneyac.com

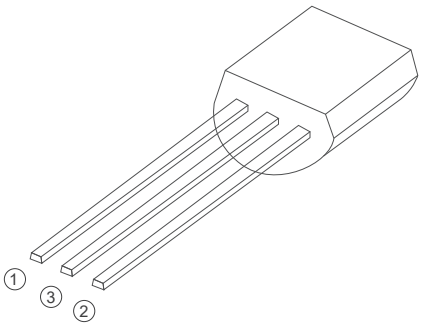

TO-92

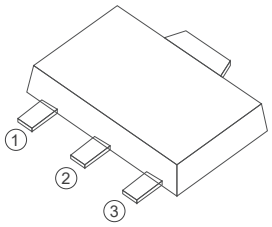

SOT-89

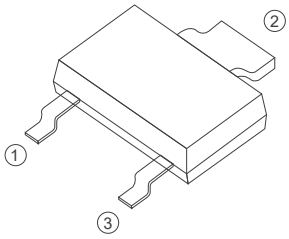

SOT-89-2L

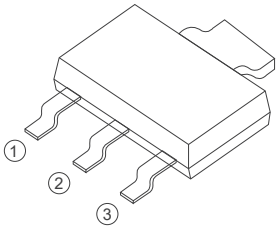

SOT-223

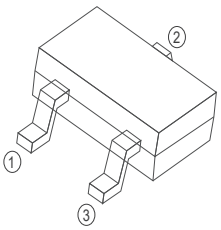

SOT-23

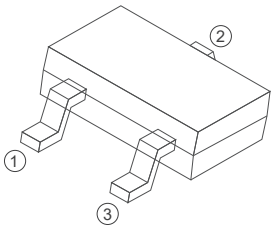

SOT-23-3L

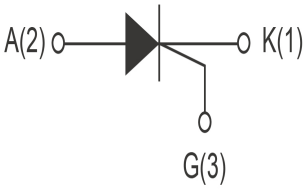

FEATURES

› IT(RMS):0.8A › VGT: 0.8V › VDRM VRRM:600Vand800V

APPLICATIONS

Washing machine,vacuums, massager,solid state relay， AC Motor speed regulation and so on.

Downloaded From Oneyac.com

Absolute Maximum Ratings (Tj=25°C unless otherwise specifed)

Symbol	Parameter	Conditions	Ratings	Unit
VDRM VRRM	Repetitive Peak Off-State Voltage	MCR100-6 MCR100-8	600/800	V
IT(AV)	Average On-State Current		0.7	A
IT(RMS)	R.M.S On-State Current		0.8	A
ITSM	Surge On-State Current	F=50Hz Tp=10ms	11	A
I^2t	I^2t for fusing	Tp=10ms	0.45	A^2s
PG(AV)	Average Gate Power Dissipation	Tj=125°C	0.1	W
PGM	Peak Gate Power Dissipation	tp=20us Tj=125°C	0.5	W
Tj	Operating Junction Temperature		～40~125	°C
TSTG	Storage Temperature		～40~150	°C

Electrical Characteristics (Tj=25°C unless otherwise specifed)

Symbol	Parameter	Test Conditions	Value	Unit
IDRM	Repetitive Peak Off-State Current	Tc=25°C	≤5	uA
		Tc=110°C	≤100	uA
IRRM	Repetitive Peak Reverse Current	Tc=25°C	≤5	uA
		Tc=110°C	≤100	uA
VTM	Forward "on" voltage	IT=1.2A tp=380us	≤1.7	V
VGD	Gate non-trigger voltage	VD=VDRM, Tj=110°C,RGK=1kΩ,RL=3.3KΩ	≥0.1	V
VGT	Gate trigger voltage	VD=12V ,IT=0.1A	≤0.8	V
IH	Holding current	IT=50mA	≤4	mA
IL	Latching current	IG=1.2 IGT	≤6	mA
IGT	Gate trigger current	VD=12V ,IT=0.1A	≤200	uA
dv/dt	Critical-rate of rise of commutation voltage	TJ=110°C ,VD=2/3VDRM ,RGK=1K Ω	≥10	V/us

THERMAL RESISTANCES

Symbol	Parameter		Value	Unit
$R_{th(j-c)}$	junction to case	TO-92/ SOT-23/ SOT-23-3L	75	℃/W
		SOT-89 SOT-89-2L	45	
		SOT-223	31	

Downloaded From Oneyac.com

FIG1

Maximum power dissipation versus RMS on-state current

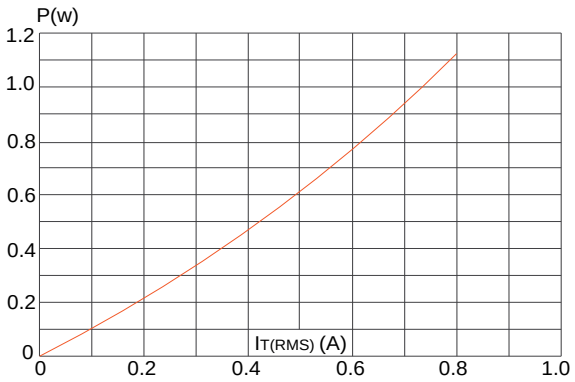

FIG2

RMS on-state current versus case temperature

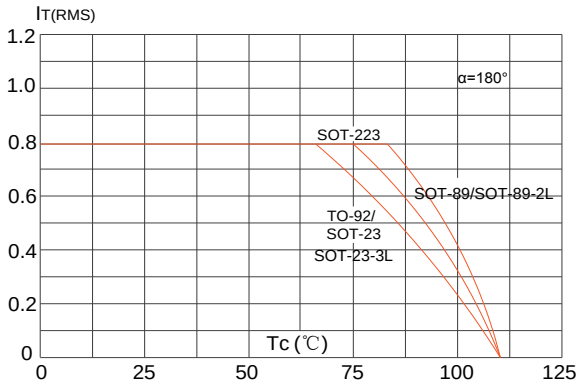

FIG3

Surge peak on-state current versus number of cycles

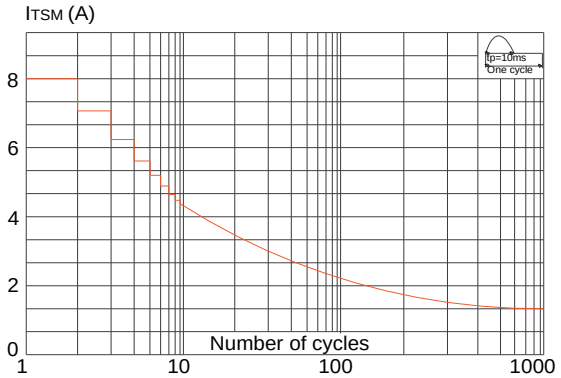

FIG4

On-state characteristics (maximum values)

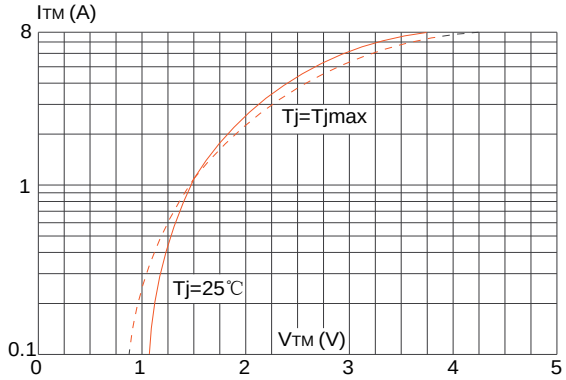

FIG5

Non-repetitive surge peak on-state current for a sinusoidal pulse with width tp<20ms, and corresponging value of I^2t (dI/dt < 100A/μs)

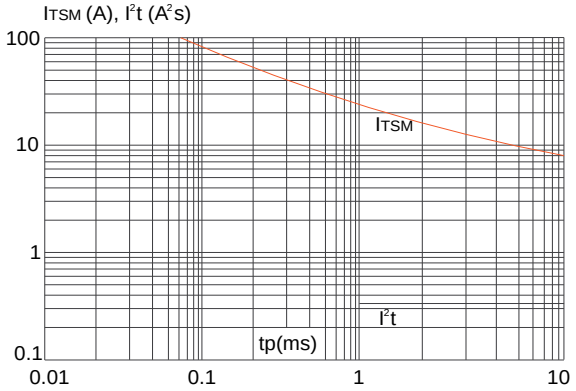

FIG6

FIG.6: Relative variations of gate trigger current, holding current and latching current versus junction temperature

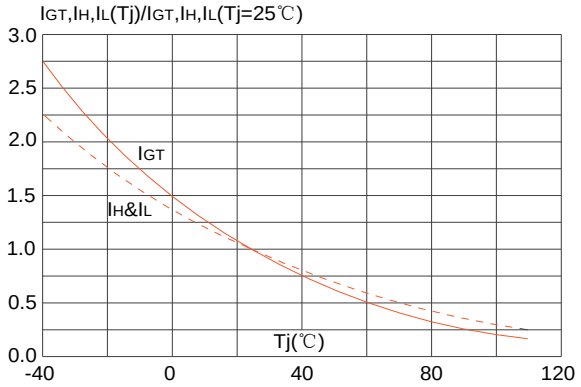

Downloaded From Oneyac.com

PACKAGE MECHANICAL DATA

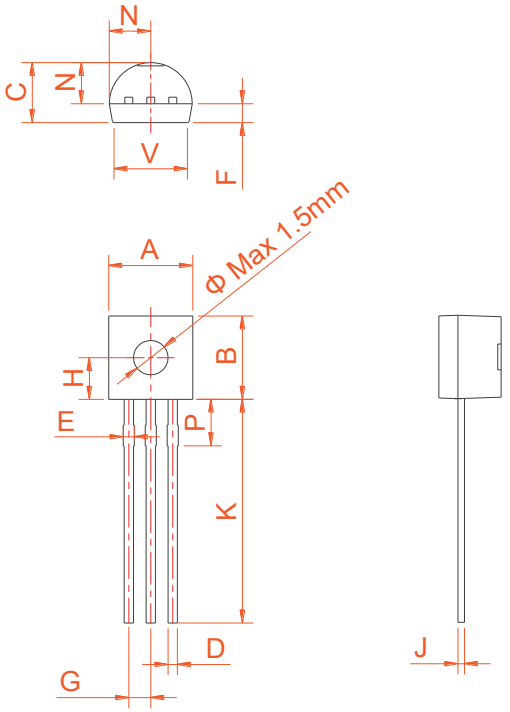

TO-92

Ref.	Dimensions					
	Millimeters			Inches		
	Min.	Typ.	Max.	Min.	Typ.	Max.
A	4.45		5.20	0.175		0.205
B	4.32		5.33	0.170		0.210
C	3.18		4.19	0.125		0.165
D	0.407		0.533	0.016		0.021
E	0.60		0.80	0.024		0.031
F	-	1.1	-	-	0.043	-
G	-	1.27	-	-	0.050	-
H	-	2.30	-	-	0.091	-
J	0.36		0.50	0.014		0.020
K	12.70		15.0	0.500		0.591
N	2.04		2.66	0.080		0.105
P	1.86		2.06	0.073		0.081
V	-		4.3	-		0.169

Ref.	Dimensions					
	Millimeters			Inches		
	Min.	Typ.	Max.	Min.	Typ.	Max.
A	1.3	1.4	1.5	0.051	0.055	0.059
A1	0.01	0.06	0.10	0.001	0.002	0.004
B	1.6	1.7	1.8	0.063	0.067	0.071
B1	0.3	0.4	0.5	0.012	0.016	0.020
C	0.22	0.254	0.32	0.009	0.010	0.013
D	4.75	4.95	5.15	0.187	0.195	0.203
E	2.75	2.95	3.15	0.108	0.116	0.124
F		3.0			0.118	
F1		1.5			0.059	
G	0.2	0.3	0.4	0.008	0.012	0.016
H	0.58	0.78	0.98	0.023	0.031	0.039
J	4.3	4.5	4.7	0.169	0.177	0.185
K		0.88			0.035	

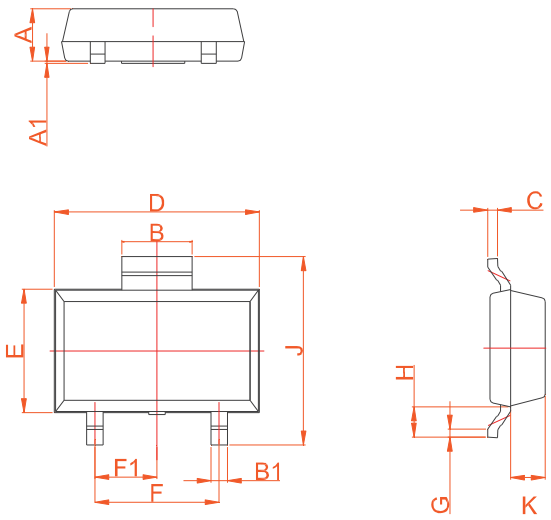

SOT-89-2L

Downloaded From Oneyac.com

PACKAGE MECHANICAL DATA

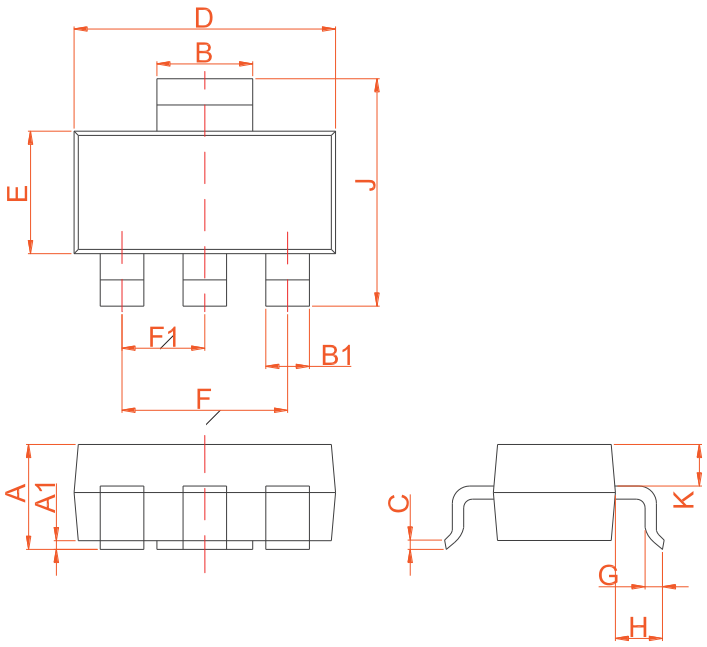

Ref.	Dimensions					
	Millimeters			Inches		
	Min.	Typ.	Max.	Min.	Typ.	Max.
A	1.5	1.6	1.8	0.059	0.063	0.071
A1	0	0.06	0.10	0	0.002	0.004
B	2.9	3.0	3.1	0.114	0.118	0.122
B1	0.6	0.7	0.8	0.024	0.028	0.031
C	0.22	0.26	0.32	0.009	0.010	0.013
D	6.3	6.5	6.7	0.248	0.256	0.264
E	3.3	3.5	3.7	0.130	0.138	0.146
F		4.6			0.181	
F1		2.3			0.091	
G	0.7	0.9	1.1	0.028	0.035	0.043
H	1.5	1.75	2.0	0.059	0.069	0.079
J	6.7	7.0	7.3	0.264	0.276	0.287
K	0.8	0.9	1.0	0.031	0.035	0.039

SOT-223

Ref.	Dimensions					
	Millimeters			Inches		
	Min.	Typ.	Max.	Min.	Typ.	Max.
A	1.3	1.4	1.5	0.051	0.055	0.059
A1	0.01	0.06	0.10	0.001	0.002	0.004
B	1.6	1.7	1.8	0.063	0.067	0.071
B1	0.3	0.4	0.5	0.012	0.016	0.020
C	0.22	0.254	0.32	0.009	0.010	0.013
D	4.75	4.95	5.15	0.187	0.195	0.203
E	2.75	2.95	3.15	0.108	0.116	0.124
F		3.0			0.118	
F1		1.5			0.059	
G	0.2	0.3	0.4	0.008	0.012	0.016
H	0.58	0.78	0.98	0.023	0.031	0.039
J	4.3	4.5	4.7	0.169	0.177	0.185
K		0.88			0.035	

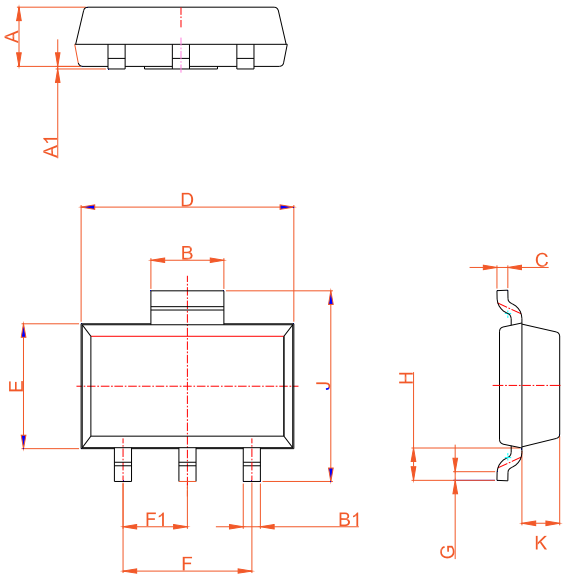

SOT-89

Downloaded From Oneyac.com

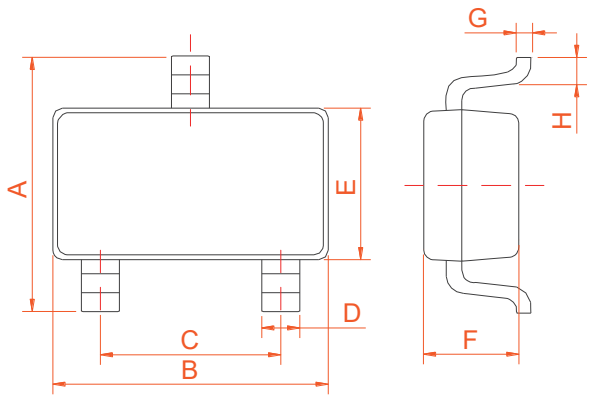

SOT-23-3L

Ref.	Dimensions					
	Millimeters			Inches		
	Min.	Typ.	Max.	Min.	Typ.	Max.
A	2.65		2.95	0.104		0.116
B		2.92			0.115	
C		1.90			0.075	
D	0.34		0.36	0.013		0.014
E		1.60			0.063	
F		1.17			0.046	
G		0.15			0.006	
H	0.25		0.55	0.010		0.022

ShenZhenHanKingyuan
Electronic CO.,Ltd

Information furnished is believed to be accurate and reliable.However,Shenzhen HanKingyuan Electronic assumes no responsibility for the consequences of use of such information nor for any infringement of patents or other rights of third parties which may result from its use.Specifications mentioned in this publication are subject to change without notice.This publication supersedes and replaces all information previously supplied.
The KY logo is a registered trademark of Shenzhen HanKingyuan Electronic。
©2013 Shenzhen HanKingyuan Electronic - Printed in Shenzhen -All Rights Reserved

Downloaded From Oneyac.com

单击下面可查看定价，库存，交付和生命周期等信息

>>KY(韩景元)

Downloaded From Oneyac.com