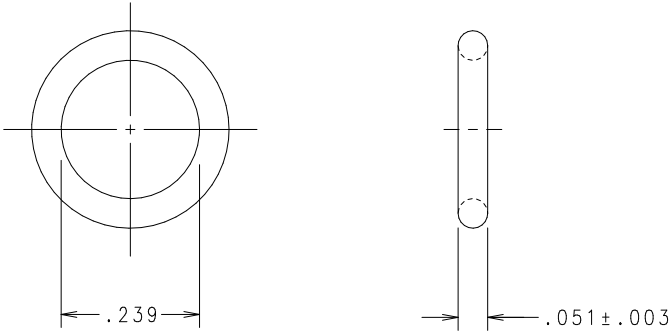

NO	COMPONENT NO	DESCRIPTION	QTY/M	U/M

BILL OF MATERIAL

UNLESS OTHERWISE SPECIFIED, DIMENSIONS DO NOT INCLUDE PLATING.

O	DENOTES CRITICAL CHARACTERISTICS.
CPK	DENOTES CPK DIMENSIONS,-MINIMUM CPK VALUE
ST	DENOTES A CHARACTERISTIC THAT PROVIDES AN INDICATION OF PROCESS PERFORMANCE. PROCEDURE FOR MEASUREMENT AND TRACKING TO BE DEFINED IN LITTELFUSE INSPECTION INSTRUCTIONS.
CP	DENOTES CP DIMENSIONS,-MINIMUM CP VALUE MUST BE WITHIN THE DIMENSIONAL LIMITATIONS SHOWN ON DRAWING AND INITIALLY LOCATED TO ALLOW FOR MAXIMUM TOOL LIFE.

LTR	REVISION
G	39107C- REVISED & REDRAWN ON NEW FORMAT 4/21/98 JMB

COPIES TO

1	9	18
2	10	19
3	12	20
4	13	21
5	14	23
6	15	33
7	16	43
8	17	53

MATL SPEC	FINISH
NEOPRENE (70 DUROMETER)	BLACK

DRW JMB	DATE 3/2/98	SCALE 4=1
CHK	DATE	SUPER DRW
APPD	DATE	RAW STK WT LBS/M

TOLERANCE UNLESS OTHERWISE SPECIFIED

TWO PLACE DEC	±.01	FRACTION	±
THREE PLACE DEC	±.005	ANGULAR	±

TITLE

RING WASHER

Littelfuse®

DES PLAINES, ILLINOIS 60016

REVISION G DRWG. NO. -901-134

CHANGES ALLOWED - NO PENCIL

CAD GENERATED DRAWING

UNCONTROLLED DOCUMENT

Downloaded From Oneyac.com

单击下面可查看定价，库存，交付和生命周期等信息

>>Littelfuse(美国力特)

Downloaded From Oneyac.com