PART NUMBER	"A"	"B"	"C"	"D"	LEAD "A" COLOR	LEAD "B" COLOR
FHAC0003ZXJA	89.3±5 (3.516)	89.3±5 (3.516)	6.35±2 (0.25)	6.35±2 (0.25)	RED	RED
FHAC0003ZXJB	89.3±5 (3.516)	89.3±5 (3.516)	6.35±2 (0.25)	6.35±2 (0.25)	RED WITH BLUE STRIPE	RED WITH BLUE STRIPE

LTR	DATE	REVISION	CHK	APD
A	11/21/07	000218ER-RELEASE FHAC0003ZXJA AND FHAC0003ZXJB DHM		

INSPECTION NOTES

1. INSPECT STRIPPED WIRE FOR CUT STRANDS (NO CUT STRANDS ALLOWED)
2. NO DAMAGE TO WIRE INSULATION
3. NO SHORT SHOTS ON MOLDING
4. FLASH OR GATING NOT TO EXCEED 0.13

NOTES

1. HOLDER MATERIAL: BLACK TPV 251 80W232
2. CONTACTS: C194 COPPER ALLOY: TIN-PLATED
3. WIRE: 14 AWG STRANDED COPPER, 125°C RATED, GXL WIRE
4. CRIMP: MUST MEET USCAR 21 STANDARD
5. MAX. RATING: 20A, 32Vdc
6. MAX. TEMPERATURE 105°C
7. DATE CODE AND MOLD CAVITY NUMBER MARKED ON ALL UNITS

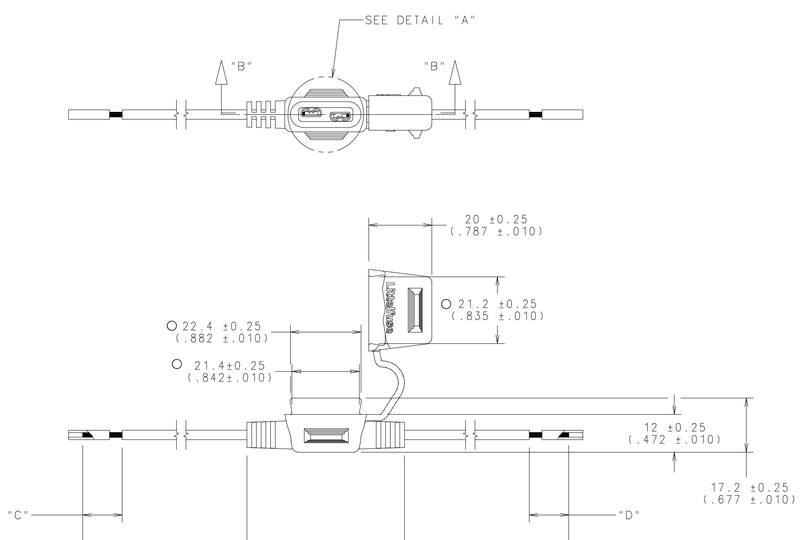

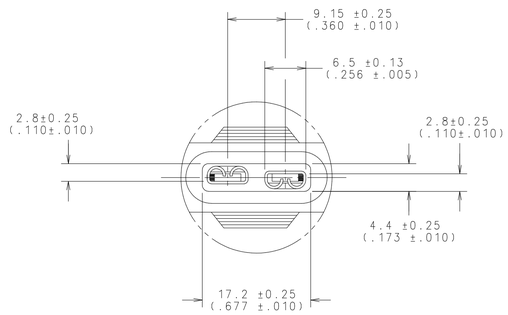

DETAIL "A"

SCALE 2:1

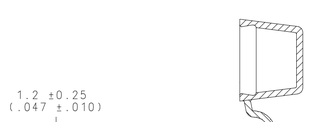

SECTION "B-B"

NO	COMPONENT NO	DESCRIPTION	QTY/M	U/M

BILL OF MATERIAL

UNLESS OTHERWISE SPECIFIED, DIMENSIONS ARE IN MILLIMETERS. DIMENSIONS IN BRACKETS [ ] ARE INCHES.

UNLESS OTHERWISE SPECIFIED, DIMENSIONS DO NOT INCLUDE PLATING.

O	DENOTES CRITICAL CHARACTERISTICS.
CPK	DENOTES CPK DIMENSIONS. MINIMUM CPK VALUE
ST	DENOTES A CHARACTERISTIC THAT PROVIDES AN INDICATION OF PROCESS PERFORMANCE. PROCEDURE FOR MEASUREMENT AND TRACKING TO BE DEFINED IN LITTELFUSE INSPECTION INSTRUCTIONS.
CP	DENOTES CP DIMENSIONS. MINIMUM CP VALUE MUST BE WITHIN THE DIMENSIONAL LIMITATIONS SHOWN ON DRAWING AND INITIALLY LOCATED TO ALLOW FOR MAXIMUM TOOL LIFE.

D

MATL SPEC: SEE NOTES

FINISH:

COPIES TO

1	9	18
2	10	19
3	12	20
4	13	21
5	14	23
6	15	33
7	16	43
8	17	53

DRW	DHM	DATE 11/21/07	SCALE FULL UNLESS NOTED
CHK		DATE	SUPER DR
APPD		DATE	FINISH GOOD WT GRAMS/PIECE

TOLERANCE UNLESS OTHERWISE SPECIFIED
TWO PLACE DEC ±.25[.01] FRACTION ±
THREE PLACE DEC ±.100[.004] ANGULAR ±1°

3RD ANGLE PROJECTION

TITLE ATO IN-LINE FUSEHOLDER

Littelfuse® DES PLAINES, ILLINOIS 60016

REVISION A

DRWG. NO. FHAC0003ZXJ

FINAL SERIES

CAD GENERATED DRAWING - NO PENCIL CHANGES ALLOWED

UNCONTROLLED DOCUMENT

Downloaded From Oneyac.com

单击下面可查看定价，库存，交付和生命周期等信息

>>Littelfuse(美国力特)

Downloaded From Oneyac.com