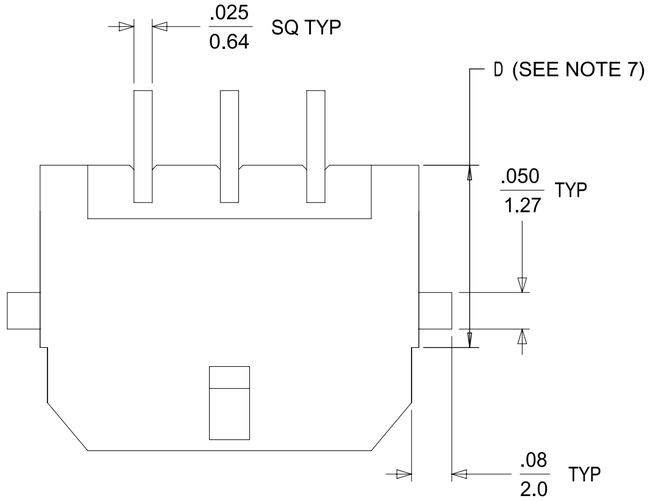

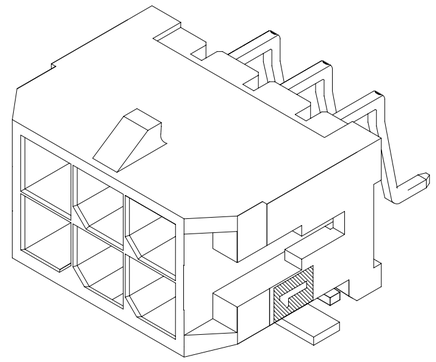

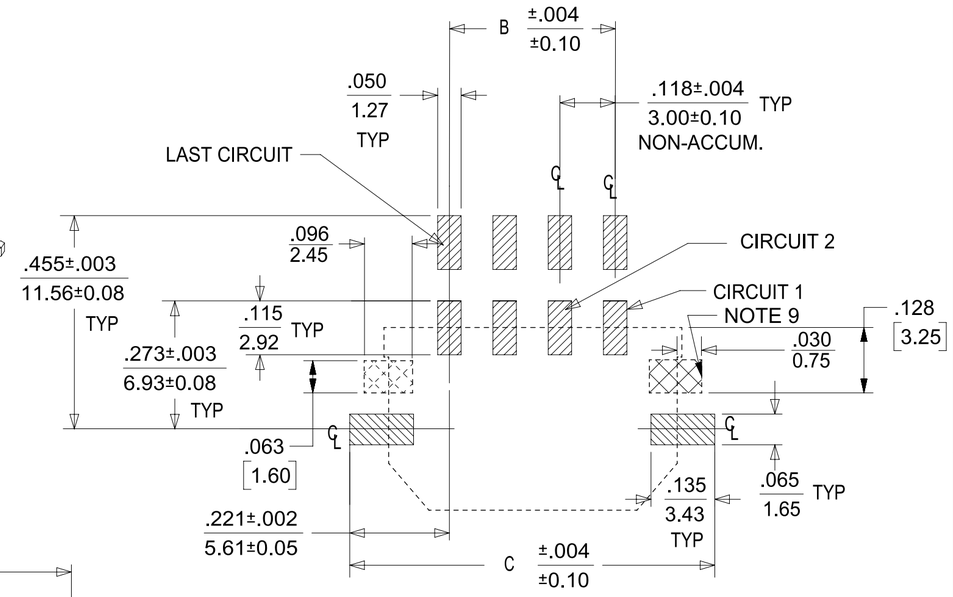

PCB LAYOUT: COMPONENT SIDE

CKTS	A	B	C
02	.262 6.65	NA	.441 11.20
04	.380 9.65	.118 3.00	.559 14.20
06	.498 12.65	.236 6.00	.677 17.20
08	.616 15.65	.354 9.00	.795 20.20
10	.734 18.65	.472 12.00	.913 23.20
12	.852 21.65	.591 15.00	1.031 26.20
14	.970 24.65	.709 18.00	1.150 29.20
16	1.088 27.65	.827 21.00	1.268 32.20
18	1.206 30.65	.945 24.00	1.386 35.20
20	1.325 33.65	1.063 27.00	1.504 38.20
22	1.443 36.65	1.181 30.00	1.622 41.20
24	1.561 39.65	1.299 33.00	1.740 44.20

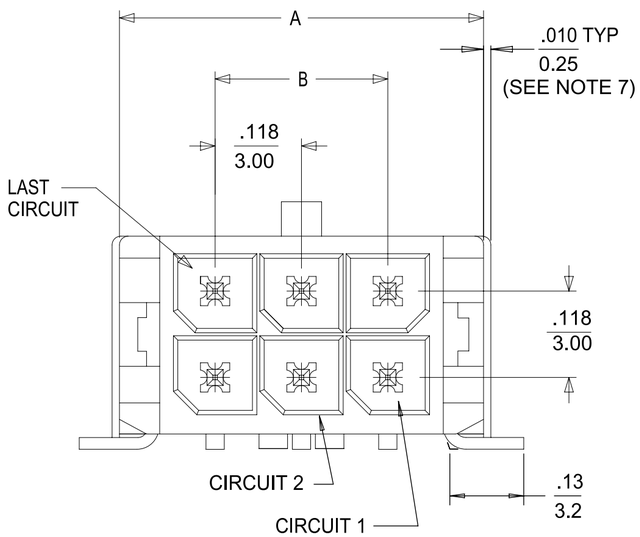

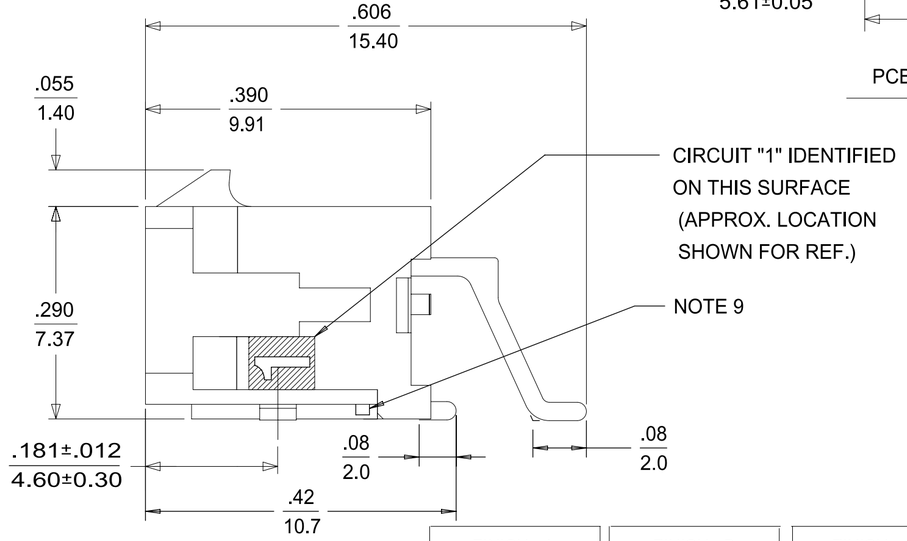

NOTES:

1. HOUSING MATERIAL: GLASS FILLED LIQUID CRYSTAL POLYMER UL94V-0, COLOR: BLACK, TERMINAL MATERIAL: BRASS ALLOY
2. FINISH: A = .000060/(0.00152) MIN. REFLOWED MATTE TIN OVER .000050/(0.00127) MIN. NICKEL PLATE. (FINISH IS BRIGHT IN APPEARANCE, THICKNESS AS APPLIED PRIOR TO REFLOW).
   B = .000015/(0.00038) MIN. GOLD IN SELECTIVE AREA; .000100/(0.00254) MIN. MATTE TIN ON SOLDER TAILS; BOTH OVER .000050/(0.00127) MIN. NICKLE PLATE.
   C = .000030/(0.00076) MIN. GOLD IN SELECTIVE AREA; .000100/(0.00254) MIN. MATTE TIN ON SOLDER TAILS; BOTH OVER .000050/(0.00127) MIN. NICKLE PLATE.
   D = .000100/(0.00254) MIN. MATTE TIN OVER .000050/(0.00127) MIN. NICKEL PLATE.
3. PRODUCT SPECIFICATION: PS-43045
4. TAPE AND REEL PACK: SEE MOLEX DRAWING 430450001-PK.
5. MATES WITH MOLEX RECEPTACLE SERIES 43025
6. THE COPLANARITY DIMENSION IS ESTABLISHED BY PLACING THE ASSEMBLY ON A FLAT SURFACE. THE DISTANCE FROM THAT SURFACE TO THE BOTTOM OF ANY TERMINAL OR NAIL MUST NOT EXCEED .006/0.15.
7. CIRCUIT SIZES 2-6: "D" IS 0.265/6.74 FOR .010/0.25 STEP. CIRCUIT SIZES 8-24: "D" IS .063/1.60 FOR .010/0.25 STEP.
8. TO AVOID INTERFERENCE BETWEEN RECEPTACLE AND PCB, HEADER MUST BE PLACED WITHIN .400/(10.16) MAX. FROM EDGE OF PCB, AS SHOWN IN LOCATION DETAIL.
9. METAL TAB MAY BE FLUSH WITH PCB. NO EXPOSED TRACES OR VIAS ALLOWED NEAR THESE AREAS.
10. THIS PART CONFORMS TO CLASS B REQUIREMENTS OF COSMETIC SPECIFICATION PS-45499-002.
11. TEXT ON PART IS FOR REFERENCE ONLY. TEXT AND TEXT LOCATION MAY VARY DEPENDING ON PART NUMBER AND/OR TOOL.

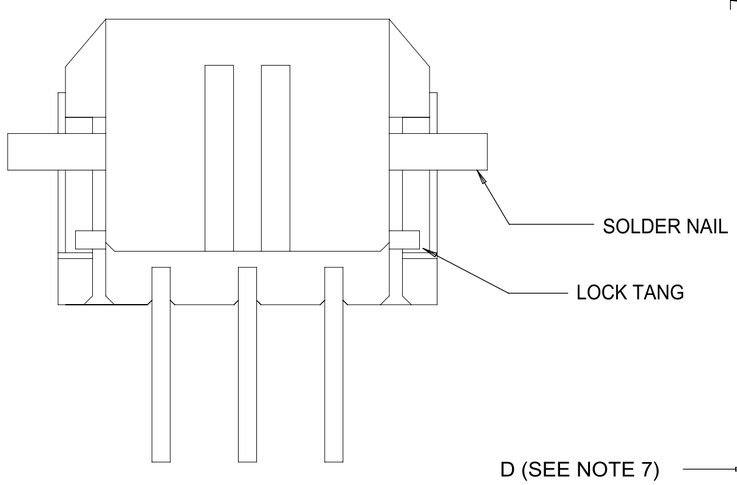

	FINISH A	FINISH B	FINISH C	FINISH D
CKTS	MATERIAL NO:	MATERIAL NO:	MATERIAL NO:	MATERIAL NO:
02	43045-0209	43045-0210	43045-0211	43045-0292
04	43045-0409	43045-0410	43045-0411	43045-0492
06	43045-0609	43045-0610	43045-0611	43045-0692
08	43045-0809	43045-0810	43045-0811	43045-0892
10	43045-1009	43045-1010	43045-1011	43045-1092
12	43045-1209	43045-1210	43045-1211	43045-1292
14	43045-1409	43045-1410	43045-1411	43045-1492
16	43045-1609	43045-1610	43045-1611	43045-1692
18	43045-1809	43045-1810	43045-1811	43045-1892
20	43045-2009	43045-2010	43045-2011	43045-2092
22	43045-2209	43045-2210	43045-2211	43045-2292
24	43045-2409	43045-2410	43045-2411	43045-2492

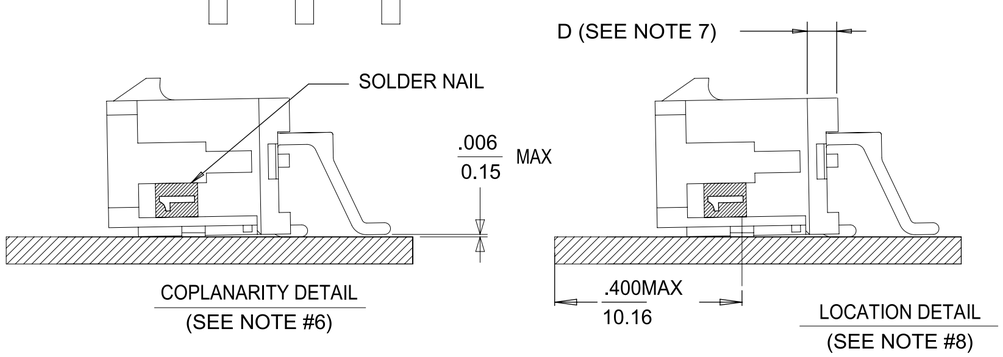

COPLANARITY DETAIL
(SEE NOTE #6)

LOCATION DETAIL
(SEE NOTE #8)

SYMBOLS

THIS DRAWING CONTAINS INFORMATION THAT IS PROPRIETARY TO MOLEX ELECTRONIC TECHNOLOGIES, LLC AND SHOULD NOT BE USED WITHOUT WRITTEN PERMISSION

DIMENSION UNITS	SCALE
IN/MM	NTS

GENERAL TOLERANCES (UNLESS SPECIFIED)

	MM	INCH
4 PLACES	±	±
3 PLACES	±	± 0.01
2 PLACES	± 0.25	± 0.014
1 PLACE	± 0.36	±
0 PLACES	±	±
ANGULAR TOL	± 0.5 °	

DRAFT WHERE APPLICABLE MUST REMAIN WITHIN DIMENSIONS

CURRENT REV DESC: MICROFIT PK SPEC REF

EC NO: 611607
DRWN: SALHAMY 2018/12/26
CHK'D: SSOUSEK 2019/08/09
APPR: FSMITH 2019/08/15

INITIAL REVISION:
DRWN: SAMIEC 2000/03/15
APPR: FSMITH 2016/02/26

THIRD ANGLE PROJECTION | DRAWING: C-SIZE | SERIES: 43045

molex

MICRO FIT (3.0) RIGHT ANGLE SMT, NAILS
DUAL ROW HEADER

PRODUCT CUSTOMER DRAWING

DOCUMENT NUMBER	DOC TYPE	DOC PART	REVISION
SD-43045-004	PSD	000	G7

MATERIAL NUMBER	CUSTOMER	SHEET NUMBER
SEE CHART	GENERAL MARKET	1 OF 1

DOCUMENT STATUS	P1	RELEASE DATE	2019/08/15 16:28:57

Downloaded From Oneyac.com

FORMAT: Eng-tlpgs-master-tb-prod-C
REVISION: D
DATE: 2018/01/18

单击下面可查看定价，库存，交付和生命周期等信息

>>MOLEX

Downloaded From Oneyac.com