MM5Z series

Voltage regulator diodes

Rev. 1 — 7 April 2021 Product data sheet

1. General description

General-purpose Zener diodes in an SOD523 (SC-79) ultra small flat lead Surface-Mounted Device (SMD) plastic package.

2. Features and benefits

- Non-repetitive peak reverse power disspation: ≤ 40 W
- Total power dissipation: ≤ 300 mW
- Tolerance series: ± 2 %
- Wide working voltage range: nominal 2.4 V to 36 V
- Low differential resistance

3. Applications

- General regulation functions

4. Quick reference data

Table 1. Quick reference data

Symbol	Parameter	Conditions		Min	Typ	Max	Unit
V_F	forward voltage	I_F = 100 mA	[1]	-	-	1.1	V
P_{ZSM}	non-repetitive peak reverse power dissipation		[2]	-	-	40	W

[1] Pulse test: $t_p \leq 300$ µs; $\delta \leq 0.02$
[2] t_p = 100 µs; square wave; T_j = 25 °C before surge

5. Pinning information

Table 2. Pinning

Pin	Symbol	Description	Simplified outline	Graphic symbol
1	K	cathode[1]		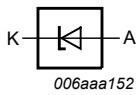
2	A	anode		

[1] The marking bar indicates the cathode.

Downloaded From Oneyac.com

6. Ordering information

Table 3. Ordering information

Type number	Package		
	Name	Description	Version
MM5Z2V4T5G to MM5Z36VT5G[1]	SC-79	plastic surface-mounted package; 2 leads	SOD523

[1] The series consists of 29 types with nominal working voltages from 2.4 V to 36 V.

7. Marking

Table 4. Marking Codes

Type number	Marking Code	Type number	Marking Code
MM5Z2V4T5G	C1	MM5Z10VT5G	E6
MM5Z2V7T5G	C2	MM5Z11VT5G	E7
MM5Z3V0T5G	C3	MM5Z12VT5G	E8
MM5Z3V3T5G	C4	MM5Z13VT5G	E9
MM5Z3V6T5G	C5	MM5Z15VT5G	E0
MM5Z3V9T5G	C6	MM5Z16VT5G	EA
MM5Z4V3T5G	C7	MM5Z18VT5G	EB
MM5Z4V7T5G	C8	MM5Z20VT5G	EC
MM5Z5V1T5G	C9	MM5Z22VT5G	ED
MM5Z5V6T5G	C0	MM5Z24VT5G	EE
MM5Z6V2T5G	E1	MM5Z27VT5G	EF
MM5Z6V8T5G	E2	MM5Z30VT5G	EG
MM5Z7V5T5G	E3	MM5Z33VT5G	EH
MM5Z8V2T5G	E4	MM5Z36VT5G	EK
MM5Z9V1T5G	E5	-	-

All information provided in this document is subject to legal disclaimers.

© Nexperia B.V. 2021. All rights reserved

Downloaded From Oneyac.com

8. Limiting values

Table 5. Limiting values

In accordance with the Absolute Maximum Rating System (IEC 60134).

Symbol	Parameter	Conditions		Min	Max	Unit
I_F	forward current			-	200	mA
P_{ZSM}	non-repetitive peak reverse power dissipation	t_p = 100 μs; square wave; T_{amb} = 25 °C; prior to surge	-	-	40	W
P_{tot}	total power dissipation	T_{amb} = 25 °C	[1]	-	300	mW
T_j	junction temperature			-	150	°C
T_{amb}	ambient temperature			−55	+150	°C
T_{stg}	storage temperature			−65	+150	°C

[1] Device mounted on an FR4 Printed-Circuit Board (PCB) with aproximately 35 mm^2 Cu area at cathode tab

9. Thermal characteristics

Table 6. Thermal characteristics

Symbol	Parameter	Conditions		Min	Typ	Max	Unit
$R_{th(j-a)}$	thermal resistance from junction to ambient	in free air	[1]	-	-	350	K/W
$R_{th(j-sp)}$	thermal resistance from junction to solder point		[2]	-	-	65	K/W

[1] Device mounted on an FR4 Printed-Circuit Board (PCB) with aproximately 35 mm^2 Cu area at cathode tab
[2] Soldering point of cathode tab

10. Characteristics

Table 7. Electrical characteristics

T_j = 25 °C unless otherwise specified.

Symbol	Parameter	Conditions		Max	Unit
V_F	forward voltage	I_F = 10 mA	[1]	0.9	V
		I_F = 100 mA	[1]	1.1	V

[1] Pulse test: $t_p \leq 300$ μs; $\delta \leq 0.02$

All information provided in this document is subject to legal disclaimers.

© Nexperia B.V. 2021. All rights reserved

Downloaded From Oneyac.com

Table 8. Electrical characteristics per type: MM5Z2V4T5G to MM5Z24VT5G

T_j = 25 °C unless otherwise specified.

MM5ZxxxT5G	Working voltage V_Z (V)		Reverse current I_R (μA)		Differential resistance r_{diff} (Ω)		Temperature coefficient S_Z (mV/K)		Diode capacitance C_d (pF)[1]
	I_Z = 5 mA				I_Z = 1 mA	I_Z = 5 mA	I_Z = 5 mA		
	Min	Max	Max	V_R (V)	Max	Max	Min	Max	Max
2V4	2.35	2.45	50.0	1.0	400	100	-3.5	0	450
2V7	2.65	2.75	20.0	1.0	450	100	-3.5	0	440
3V0	2.94	3.06	10.0	1.0	500	95	-3.5	0	425
3V3	3.23	3.37	5.0	1.0	500	95	-3.5	0	410
3V6	3.53	3.67	5.0	1.0	500	90	-3.5	0	390
3V9	3.82	3.98	3.0	1.0	500	90	-3.5	0	370
4V3	4.21	4.39	3.0	1.0	600	90	-3.5	0	350
4V7	4.61	4.79	3.0	2.0	500	80	-3.5	0.2	325
5V1	5.00	5.20	2.0	2.0	480	60	-2.7	1.2	300
5V6	5.49	5.71	1.0	2.0	400	40	-2.0	2.5	275
6V2	6.08	6.32	3.0	4.0	150	10	0.4	3.7	250
6V8	6.66	6.94	2.0	4.0	80	15	1.2	4.5	215
7V5	7.35	7.65	1.0	5.0	80	10	2.5	5.3	170
8V2	8.04	8.36	0.7	5.0	80	10	3.2	6.2	150
9V1	8.92	9.28	0.5	6.0	100	10	3.8	7.0	120
10V	9.80	10.20	0.2	7.0	150	10	4.5	8.0	110
11V	10.78	11.22	0.1	8.0	150	10	5.4	9.0	110
12V	11.76	12.24	0.1	8.0	150	10	6.0	10.0	105
13V	12.74	13.26	0.1	8.0	170	10	7.0	11.0	105
15V	14.70	15.30	0.05	10.5	200	15	9.2	13.0	100
16V	15.68	16.32	0.05	11.2	200	40	10.4	14.0	90
18V	17.64	18.36	0.05	12.6	225	45	12.4	16.0	80
20V	19.60	20.40	0.05	14.0	225	55	14.4	18.0	70
22V	21.56	22.44	0.05	15.4	250	55	16.4	20.0	60
24V	23.52	24.48	0.05	16.8	250	70	18.4	22.0	55

[1] f = 1 MHz; V_R = 0 V

All information provided in this document is subject to legal disclaimers.

© Nexperia B.V. 2021. All rights reserved

Downloaded From Oneyac.com

Table 9. Electrical characteristics per type: MM5Z27VT5G to MM5Z36VT5G

T_j = 25 °C unless otherwise specified.

MM5ZxxxT5G	Working voltage V_Z (V)		Reverse current I_R (μA)		Differential resistance r_{diff} (Ω)		Temperature coefficient S_Z (mV/K)		Diode capacitance C_d (pF)[1]
	I_Z =2 mA				I_Z = 0.5 mA	I_Z = 2 mA	I_Z = 2 mA		
	Min	Max	Max	V_R (V)	Max	Max	Min	Max	Max
27V	26.46	27.54	0.05	18.9	300	80	21.4	25.3	50
30V	29.40	30.60	0.05	21.0	300	80	24.4	29.4	50
33V	32.34	33.66	0.05	23.1	325	80	27.4	33.4	45
36V	35.28	36.72	0.05	25.2	350	90	30.4	37.4	45

[1] f = 1 MHz; V_R = 0 V

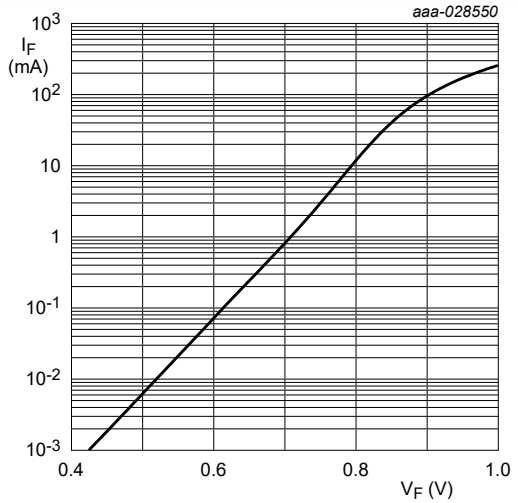

T_j = 25 ° C

Fig. 1. Forward current as a function of forward voltage; typical values (MM5Z2V4T5G)

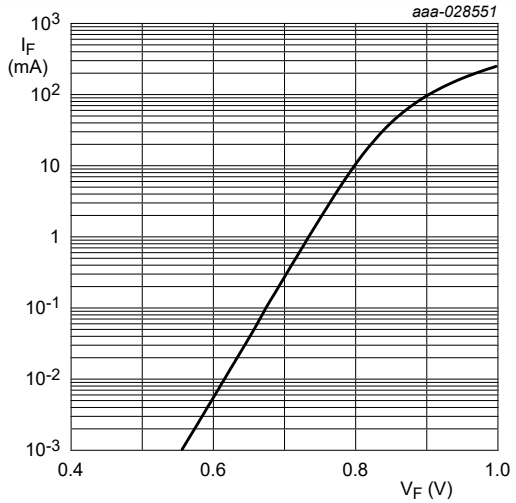

T_j = 25 ° C

Fig. 2. Forward current as a function of forward voltage; typical values (MM5Z6V8T5G)

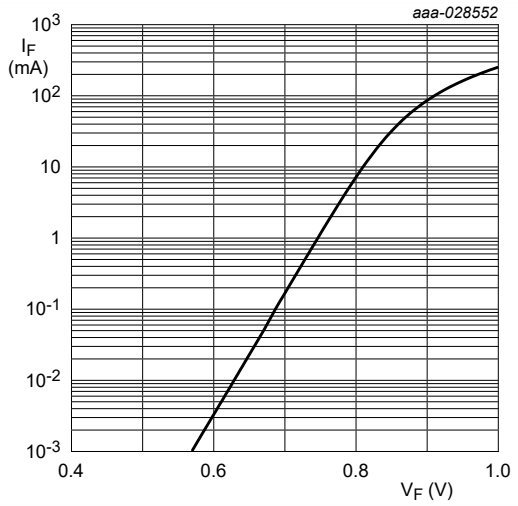

T_j = 25 ° C

Fig. 3. Forward current as a function of forward voltage; typical values (MM5Z7V5T5G)

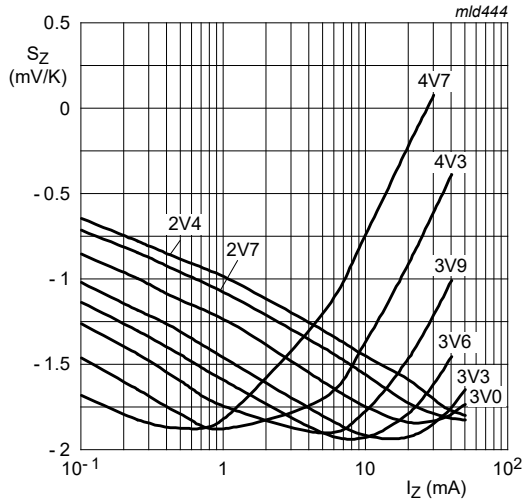

T_j = 25 °C to 150 °C

Fig. 4. Temperature coefficient as a function of working current; typical values (MM5Z2V4T5G to 4V7T5G)

All information provided in this document is subject to legal disclaimers.

© Nexperia B.V. 2021. All rights reserved

Downloaded From Oneyac.com

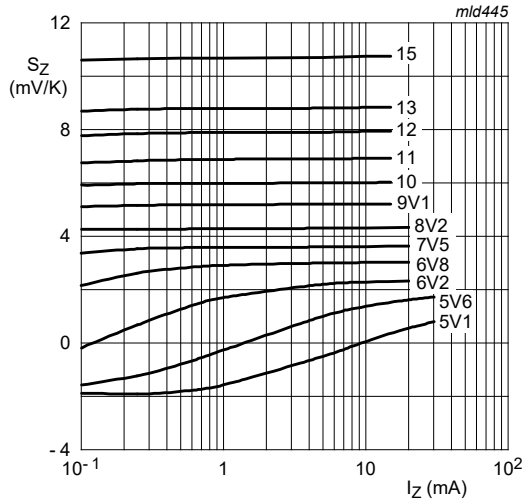

T_j = 25 °C to 150 °C

Fig. 5. Temperature coefficient as a function of working current; typical values (MM5Z5V1T5G to 15VT5G)

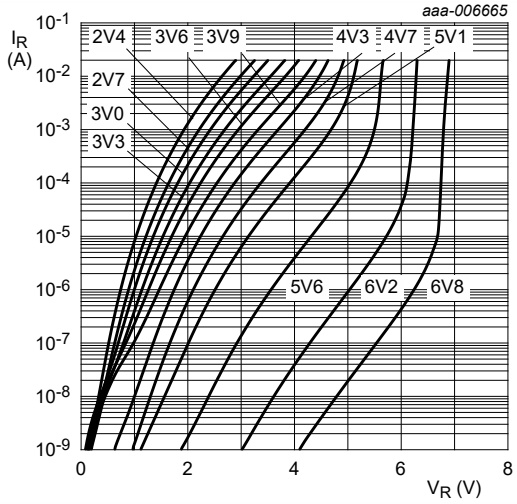

T_j = 25 °C

Fig. 6. Reverse current as a function of reverse voltage; typical values (MM5Z2V4T5G to 6V8T5G)

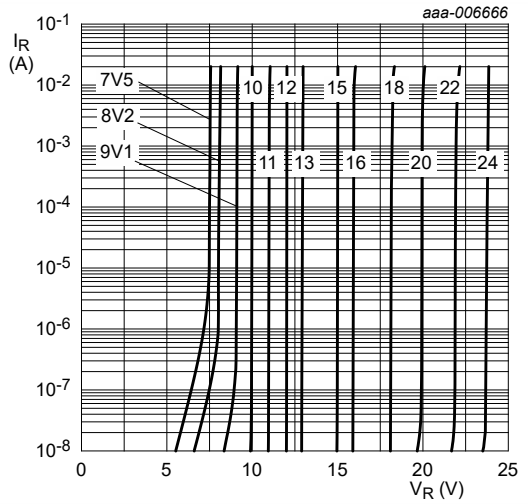

T_j = 25 °C

Fig. 7. Reverse current as a function of reverse voltage; typical values (MM5Z7V5T5G to 24VT5G)

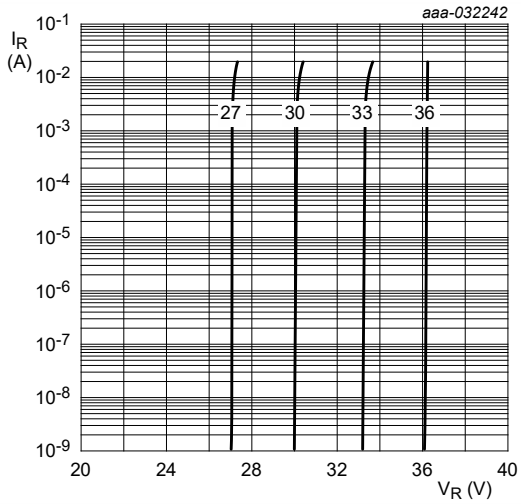

T_j = 25 °C

Fig. 8. Reverse current as a function of reverse voltage; typical values (MM5Z27VT5G to 36VT5G)

All information provided in this document is subject to legal disclaimers.

© Nexperia B.V. 2021. All rights reserved

Downloaded From Oneyac.com

11. Package outline

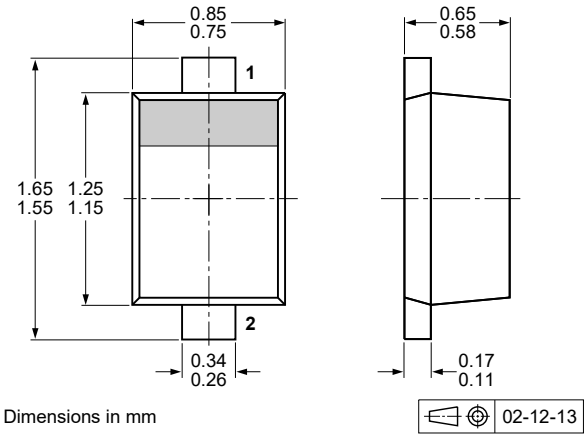

Fig. 9. Package outline SOD523 (SC-79)

12. Soldering

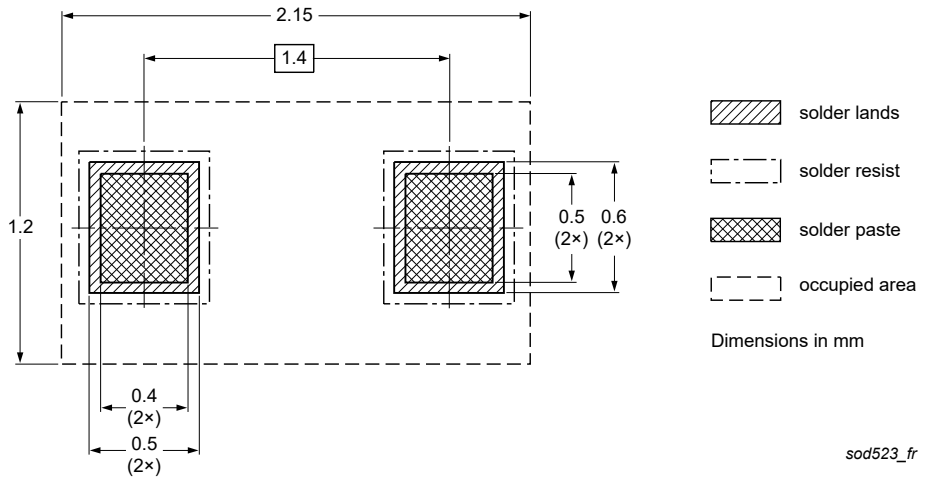

Fig. 10. Reflow soldering footprint SOD523 (SC-79)

All information provided in this document is subject to legal disclaimers.

© Nexperia B.V. 2021. All rights reserved

Downloaded From Oneyac.com

13. Revision history

Table 10. Revision history

Document ID	Release date	Data sheet status	Change notice	Supersedes
MM5Z_SER v.1	20210407	Product data sheet	-	-

All information provided in this document is subject to legal disclaimers.

© Nexperia B.V. 2021. All rights reserved

Downloaded From Oneyac.com

14. Legal information

Data sheet status

Document status [1][2]	Product status [3]	Definition
Objective [short] data sheet	Development	This document contains data from the objective specification for product development.
Preliminary [short] data sheet	Qualification	This document contains data from the preliminary specification.
Product [short] data sheet	Production	This document contains the product specification.

[1] Please consult the most recently issued document before initiating or completing a design.
[2] The term 'short data sheet' is explained in section "Definitions".
[3] The product status of device(s) described in this document may have changed since this document was published and may differ in case of multiple devices. The latest product status information is available on the internet at https://www.nexperia.com.

Definitions

Draft — The document is a draft version only. The content is still under internal review and subject to formal approval, which may result in modifications or additions. Nexperia does not give any representations or warranties as to the accuracy or completeness of information included herein and shall have no liability for the consequences of use of such information.

Short data sheet — A short data sheet is an extract from a full data sheet with the same product type number(s) and title. A short data sheet is intended for quick reference only and should not be relied upon to contain detailed and full information. For detailed and full information see the relevant full data sheet, which is available on request via the local Nexperia sales office. In case of any inconsistency or conflict with the short data sheet, the full data sheet shall prevail.

Product specification — The information and data provided in a Product data sheet shall define the specification of the product as agreed between Nexperia and its customer, unless Nexperia and customer have explicitly agreed otherwise in writing. In no event however, shall an agreement be valid in which the Nexperia product is deemed to offer functions and qualities beyond those described in the Product data sheet.

Disclaimers

Limited warranty and liability — Information in this document is believed to be accurate and reliable. However, Nexperia does not give any representations or warranties, expressed or implied, as to the accuracy or completeness of such information and shall have no liability for the consequences of use of such information. Nexperia takes no responsibility for the content in this document if provided by an information source outside of Nexperia.

In no event shall Nexperia be liable for any indirect, incidental, punitive, special or consequential damages (including - without limitation - lost profits, lost savings, business interruption, costs related to the removal or replacement of any products or rework charges) whether or not such damages are based on tort (including negligence), warranty, breach of contract or any other legal theory.

Notwithstanding any damages that customer might incur for any reason whatsoever, Nexperia's aggregate and cumulative liability towards customer for the products described herein shall be limited in accordance with the Terms and conditions of commercial sale of Nexperia.

Right to make changes — Nexperia reserves the right to make changes to information published in this document, including without limitation specifications and product descriptions, at any time and without notice. This document supersedes and replaces all information supplied prior to the publication hereof.

Suitability for use — Nexperia products are not designed, authorized or warranted to be suitable for use in life support, life-critical or safety-critical systems or equipment, nor in applications where failure or malfunction of an Nexperia product can reasonably be expected to result in personal injury, death or severe property or environmental damage. Nexperia and its suppliers accept no liability for inclusion and/or use of Nexperia products in such equipment or applications and therefore such inclusion and/or use is at the customer's own risk.

Quick reference data — The Quick reference data is an extract of the product data given in the Limiting values and Characteristics sections of this document, and as such is not complete, exhaustive or legally binding.

Applications — Applications that are described herein for any of these products are for illustrative purposes only. Nexperia makes no representation or warranty that such applications will be suitable for the specified use without further testing or modification.

Customers are responsible for the design and operation of their applications and products using Nexperia products, and Nexperia accepts no liability for any assistance with applications or customer product design. It is customer's sole responsibility to determine whether the Nexperia product is suitable and fit for the customer's applications and products planned, as well as for the planned application and use of customer's third party customer(s). Customers should provide appropriate design and operating safeguards to minimize the risks associated with their applications and products.

Nexperia does not accept any liability related to any default, damage, costs or problem which is based on any weakness or default in the customer's applications or products, or the application or use by customer's third party customer(s). Customer is responsible for doing all necessary testing for the customer's applications and products using Nexperia products in order to avoid a default of the applications and the products or of the application or use by customer's third party customer(s). Nexperia does not accept any liability in this respect.

Limiting values — Stress above one or more limiting values (as defined in the Absolute Maximum Ratings System of IEC 60134) will cause permanent damage to the device. Limiting values are stress ratings only and (proper) operation of the device at these or any other conditions above those given in the Recommended operating conditions section (if present) or the Characteristics sections of this document is not warranted. Constant or repeated exposure to limiting values will permanently and irreversibly affect the quality and reliability of the device.

Terms and conditions of commercial sale — Nexperia products are sold subject to the general terms and conditions of commercial sale, as published at http://www.nexperia.com/profile/terms, unless otherwise agreed in a valid written individual agreement. In case an individual agreement is concluded only the terms and conditions of the respective agreement shall apply. Nexperia hereby expressly objects to applying the customer's general terms and conditions with regard to the purchase of Nexperia products by customer.

No offer to sell or license — Nothing in this document may be interpreted or construed as an offer to sell products that is open for acceptance or the grant, conveyance or implication of any license under any copyrights, patents or other industrial or intellectual property rights.

Export control — This document as well as the item(s) described herein may be subject to export control regulations. Export might require a prior authorization from competent authorities.

Non-automotive qualified products — Unless this data sheet expressly states that this specific Nexperia product is automotive qualified, the product is not suitable for automotive use. It is neither qualified nor tested in accordance with automotive testing or application requirements. Nexperia accepts no liability for inclusion and/or use of non-automotive qualified products in automotive equipment or applications.

In the event that customer uses the product for design-in and use in automotive applications to automotive specifications and standards, customer (a) shall use the product without Nexperia's warranty of the product for such automotive applications, use and specifications, and (b) whenever customer uses the product for automotive applications beyond Nexperia's specifications such use shall be solely at customer's own risk, and (c) customer fully indemnifies Nexperia for any liability, damages or failed product claims resulting from customer design and use of the product for automotive applications beyond Nexperia's standard warranty and Nexperia's product specifications.

Translations — A non-English (translated) version of a document is for reference only. The English version shall prevail in case of any discrepancy between the translated and English versions.

Trademarks

Notice: All referenced brands, product names, service names and trademarks are the property of their respective owners.

All information provided in this document is subject to legal disclaimers.

© Nexperia B.V. 2021. All rights reserved

Downloaded From Oneyac.com

Contents

1. General description....1
2. Features and benefits....1
3. Applications....1
4. Quick reference data....1
5. Pinning information....1
6. Ordering information....2
7. Marking....2
8. Limiting values....3
9. Thermal characteristics....3
10. Characteristics....3
11. Package outline....7
12. Soldering....7
13. Revision history....8
14. Legal information....9

© Nexperia B.V. 2021. All rights reserved

For more information, please visit: http://www.nexperia.com
For sales office addresses, please send an email to: salesaddresses@nexperia.com
Date of release: 7 April 2021

Downloaded From Oneyac.com

单击下面可查看定价，库存，交付和生命周期等信息

>>Nexperia(安世)

Downloaded From Oneyac.com