A1RFRD10

REVISION RECORD				
REV	ECO	DESCRIPTION	DRFT	CHKD
1		PCB Layout Modify	12/9/05' YUMEI	

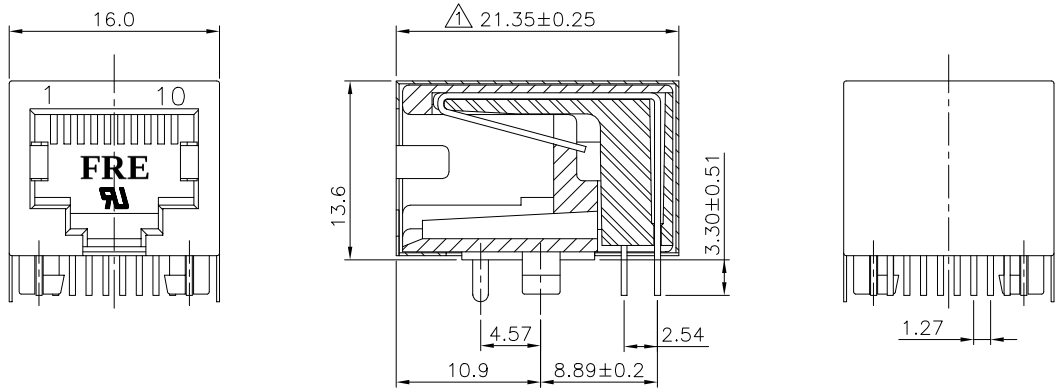

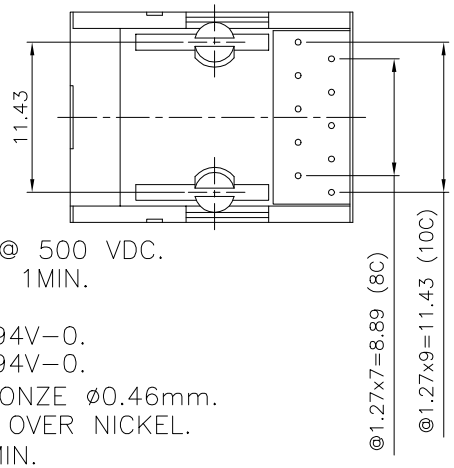

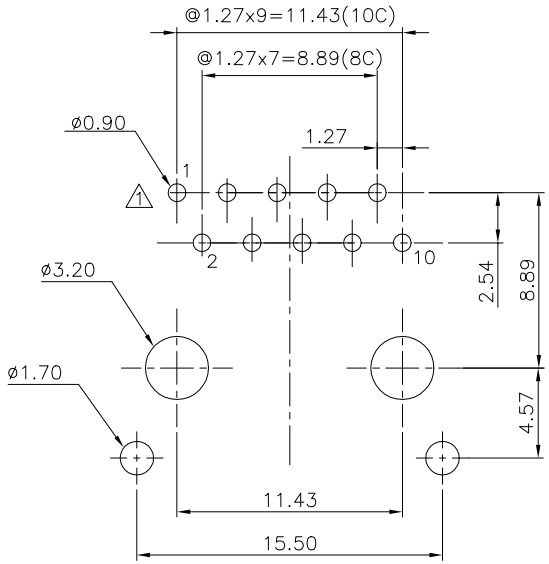

PC Board Layout T=1.60mm
Component Side Shown

NOTES:

ELECTRICAL:

1. VOLTAGE RATING : 125 VAC RMS.
2. CURRENT RATING : 1.5 AMP.
3. CONTACT RESISTANCE : 45 MILLIOHMS MAX.
4. INSULATION RESISTANCE: 1000 MEGOHMS MIN @ 500 VDC.
5. DIELECTRIC STRENGTH : 1000 VAC RMS 60Hz, 1MIN.

MECHANICAL:

1. HOUSING MATERIAL :PBT+30%GF UL94V-0.
   . INSERT MATERIAL :PBT+30%GF UL94V-0.
2. CONTACT MATERIAL : PHOSPHOR BRONZE ø0.46mm.
3. PLATING : GOLD PLATING OVER NICKEL.
4. OPERATING LIFE : 750 CYCLES MIN.
5. PCB RETENTION PRE-SOLDER : 1 LB MIN.
6. PCB RETENTION POST-SOLDER: 10 LBS MIN.
7. SHIELD PLATING : NICKEL PLAING OVER BRASS .

ENVIRONMENTAL:

1. STORAGE : -40°C TO +85°C.
2. OPERATION: -40°C TO +85°C.
3. WAVE SOLDERING TEMPERRATURE: 230~250°C (3~5 SECONDS).

MATES WITH MODULAR PLUG CONFORMING TO
FCC PART 68, SUBPART F.
CUL FILE NO. E163191

PART NUMBER: E590X-1X012X-L

NO. OF CONTACT:
- 8-8C
- 1-10C

SHIELD:
- 3-TIN
- 5-NICKEL
- C-GOLD FLASH
- D-TINNED GROUNDING TAB

- 1-3u" 2-6u"
- 3-15u" 4-30u"
- 5-50u" 6-Pd20u"
- 7-Pd30u" 8-Pd10u"

MM (INCH)		DFTO QSJ	DATE 03/29/05'
TOLERANCES EXCEPT AS NOTED		CHKD Yumei	DATE 12/09/05'
MM		MFO	DATE
.0 ±0.2	±	APPVL	DATE
.00 ±0.15	±		
.000 ±0.075	±	MATERIAL :	
ANGLES ± 0.5		QT'Y :	
THIRD ANGLE PROJECTION		FINISH :	
		SCALE : 2.5 : 1	

DETACHED LISTS

FULL RISE ELECTRONIC CO., LTD

TITLE
20.57 PCB JACK 10P

DRAWING NO. GE593A99-LC
/PART NO. SEE NOTE

SIZE A3 REV 1

DO NOT SCALE DRAWING

SHEET 1 OF 1

Downloaded From Oneyac.com

单击下面可查看定价，库存，交付和生命周期等信息

>>Pulse(普思)

Downloaded From Oneyac.com