D1RFRD006

REVISION RECORD				
REV	ECO	DESCRIPTION	DRFT	CHKD

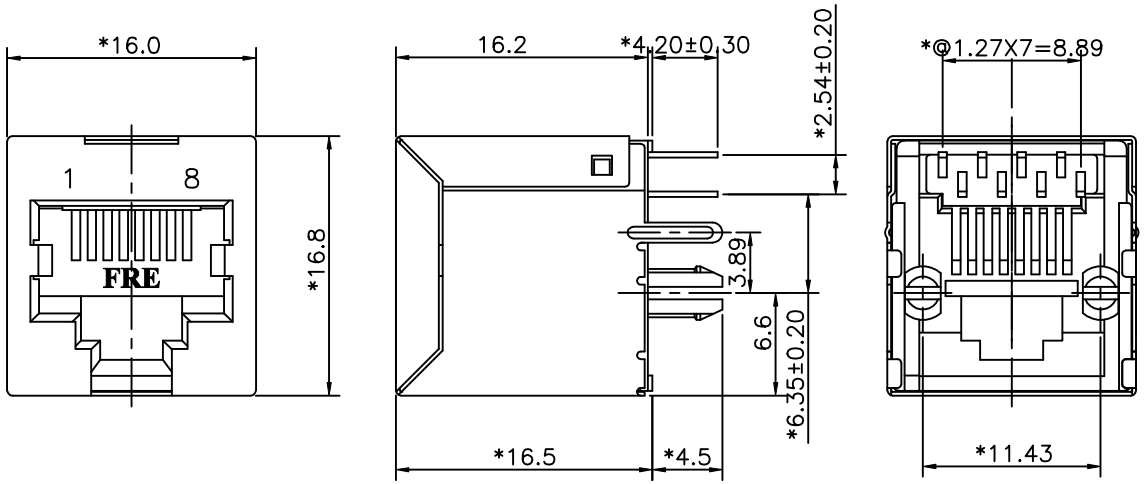

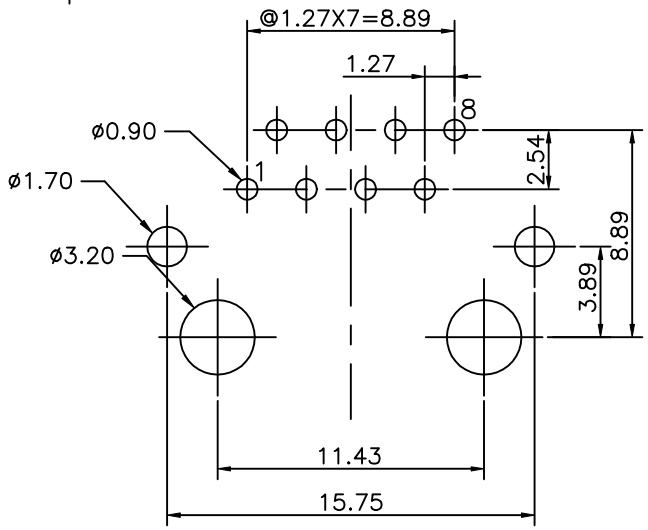

PC Board Layout Component Side Shown

NOTES:

ELECTRICAL:

1. VOLTAGE RATING : 125 VAC RMS.
2. CURRENT RATING : 1.5 AMP.
3. CONTACT RESISTANCE : 30 MILLIOHMS MAX.
4. INSULATION RESISTANCE: 1000 MEGOHMS MIN @ 500 VDC.
5. DIELECTRIC STRENGTH : 1000 VAC RMS 60Hz, 1MIN.

MECHANICAL:

1. HOUSING MATERIAL : NYLON+30%.G.F(FR52)UL94V-0.
2. CONTACT MATERIAL : PHOSPHOR BRONZE t=0.35mm.
3. PLATING : GOLD PLATING OVER NICKEL.
4. OPERATING LIFE : 750 CYCLES MIN.
5. PCB RETENTION PRE-SOLDER : 1 LB MIN.
6. PCB RETENTION POST-SOLDER: 10 LBS MIN.

ENVIRONMENTAL:

1. STORAGE : -40°C TO +85°C.
2. OPERATION: -40°C TO +85°C.
3. WAVE SOLDER TEMPERTURE: 255°C TO 265°C 5~10 SECOND.

MATES WITH MODULAR PLUG CONFORMING TO FCC PART 68, SUBPART F.

CUL FILE NO. E163191

PART NUMBER: E5288-XX0B4X-L

3-W/ "FRE"LOGO
R-W/O "FRE"LOGO

SHIELD PLATING:
F- TIN PLATING
G-TINNED GROUND PEGS

GOLD PLATING:
1- 3u" 2- 6u"
3-15u" 4-30u"
5-50u"

MM (INCH)	DFTO ANKUE	DATE 4/21/05	FULL RISE ELECTRONIC CO., LTD
TOLERANCES EXCEPT AS NOTED	CHKD SAMMY	DATE 2005/4/22	
MM .0 ± 0.2 ± .00 ± 0.15 ± .000 ± 0.075 ±	MFO	DATE	TITLE
	APPV LUSHENG	DATE 2005/4/23	RJ45 TOP ENTRY PCB MODULAR JACK(DIP TYPE)
ANGLES ± 0.5	MATERIAL :		DRAWING NO. GE523003-LA / PART NO. SEE NOTE — SIZE A3 — REV 0
	QT'Y :		
THIRD ANGLE PROJECTION	FINISH :		
DETACHED LISTS	SCALE : 3:1		DO NOT SCALE DRAWING — SHEET 1 OF 1

Downloaded From Oneyac.com

单击下面可查看定价，库存，交付和生命周期等信息

>>Pulse(普思)

Downloaded From Oneyac.com