THIS DRAWING IS UNPUBLISHED. RELEASED FOR PUBLICATION 2000
© COPYRIGHT 2000 - ALL RIGHTS RESERVED.

LOC	DIST
AD	00

REVISIONS

P	LTR	DESCRIPTION	DATE	DWN	APVD
	A1	REVISED PER ECO-18-020072	26DEC2018	R.L	H.L

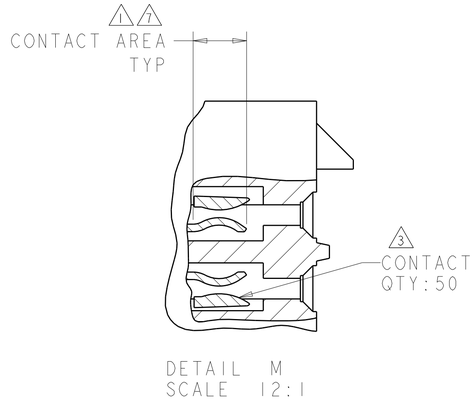

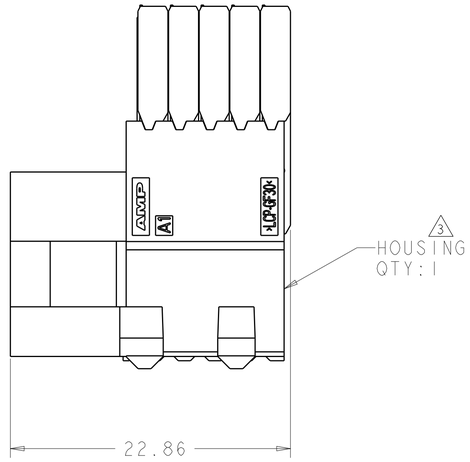

1. CONTACT MATING AREA MEETS THE PERFORMANCE REQUIREMENTS OF TE CONNECTIVITY PRODUCT SPECIFICATION 108-1957; BASED ON TELCORDIA GR-1217-CORE, APPLICATIONS IN UNCONTROLLED ENVIRONMENTS.
2. 0.76µm MIN TIN OVER 1.27µm MIN NICKEL
3. MATERIAL: CONTACT - COPPER ALLOY
   SHIELD - PHOSPHOR BRONZE
   HOUSING -LCP, UL94V-0
   CHICKLET - GLASS FILLED POLYESTER
4. REFERENCE APPLICATION SPEC 114-13020 FOR RECOMMENDED PLATED THRU HOLE DIAMETER AND PLATING THICKNESS.
5. DATUM AND BASIC DIMENSION ESTABLISHED BY CUSTOMER.
6. SEATING HEIGHT TO BOARD SURFACE.
7. CONTACT AREA LUBRICATED WITH BELLCORE APROVED LUBRICANT. TECHNICAL REFERENCE: GR-1217-CORE, ISSUE 1, NOVEMBER 1995.
8. DATE CODE
9. PART NUMBER

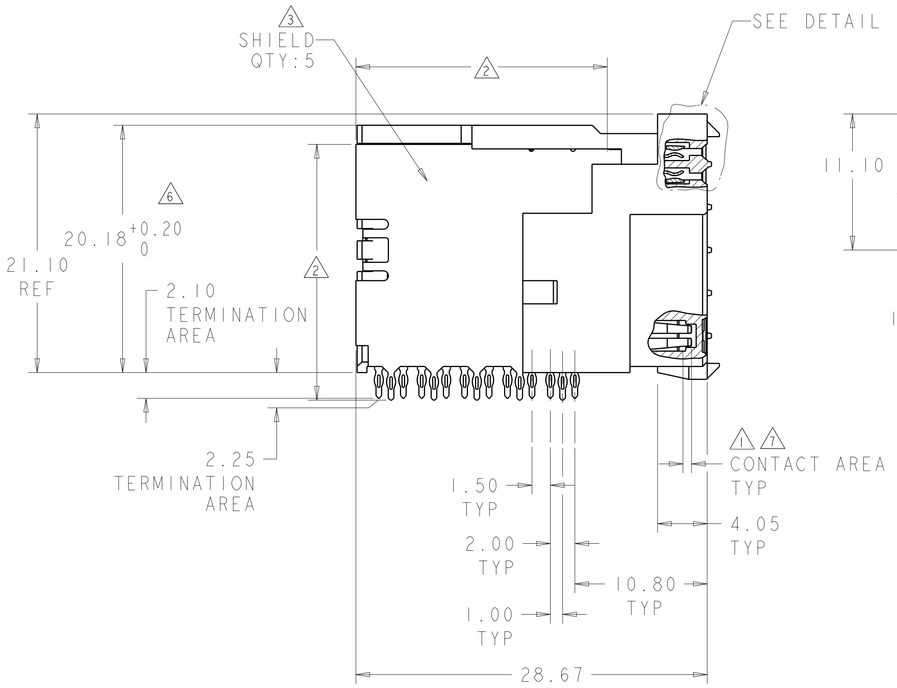

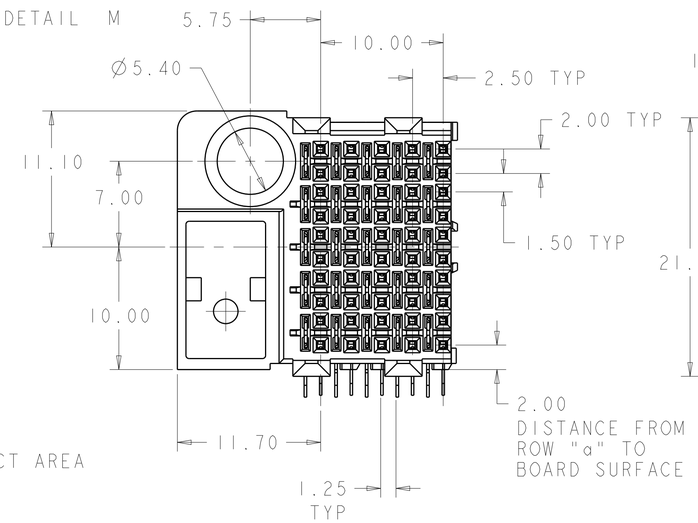

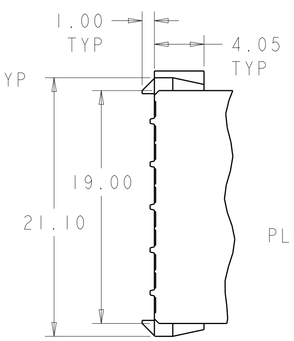

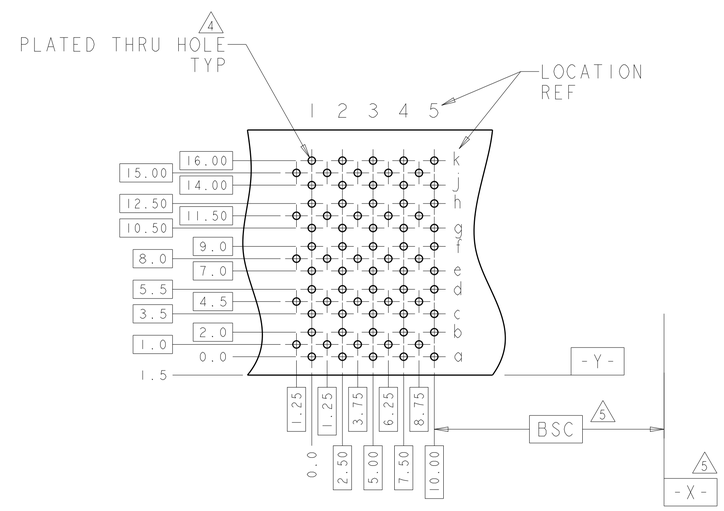

RECOMMENDED PRINTED
CIRCUIT BOARD LAYOUT
COMPONENT SIDE OF PRINTED CIRCUIT BOARD

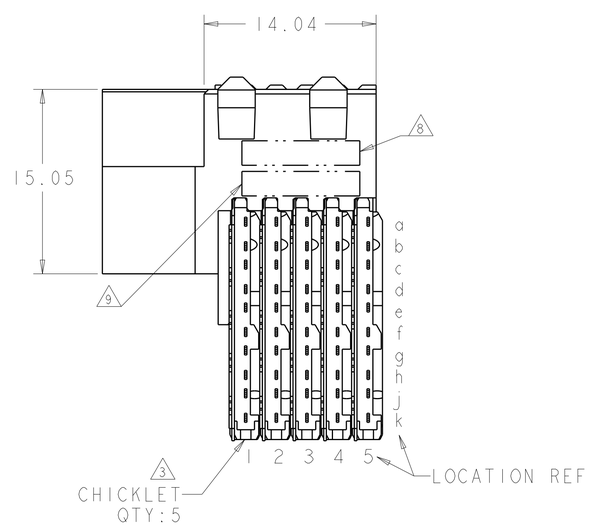

5120795-1

PART NUMBER

THIS DRAWING IS A CONTROLLED DOCUMENT.

DIMENSIONS: mm

TOLERANCES UNLESS OTHERWISE SPECIFIED:
0 PLC ±-
1 PLC ±0.2
2 PLC ±0.13
3 PLC ±0.05
4 PLC ±-
ANGLES ±1

MATERIAL - 3

FINISH SOLDER TAIL: 2
CONTACT: 1

DWN	B.CARBO	08DEC04
CHK	R PATTERSON	08DEC04
APVD	R PATTERSON	08DEC04

PRODUCT SPEC 108-1957
APPLICATION SPEC 114-13020
WEIGHT -

TE Connectivity

NAME: RECEPTACLE ASSEMBLY, 50 POSITION, UNIVERSAL GUIDE PIN, LEFT HAND, 10 ROW, DUAL BEAM, Z-PACK HS3

SIZE	CAGE CODE	DRAWING NO	RESTRICTED TO
A1	00779	C-5120795	

CUSTOMER DRAWING | SCALE 4:1 | SHEET 1 OF 1 | REV A1

4805 (3/11)

Downloaded From Oneyac.com

单击下面可查看定价，库存，交付和生命周期等信息

>>TE Connectivity(泰科)

Downloaded From Oneyac.com