THIS DRAWING IS UNPUBLISHED. RELEASED FOR PUBLICATION -,- .
© COPYRIGHT - BY TYCO ELECTRONICS CORPORATION. ALL RIGHTS RESERVED.

LOC	DIST
AD	25

REVISIONS

P	LTR	DESCRIPTION	DATE	DWN	APVD
	01	REVISED PER ECO-07-012819	28JUN07	DH	DB

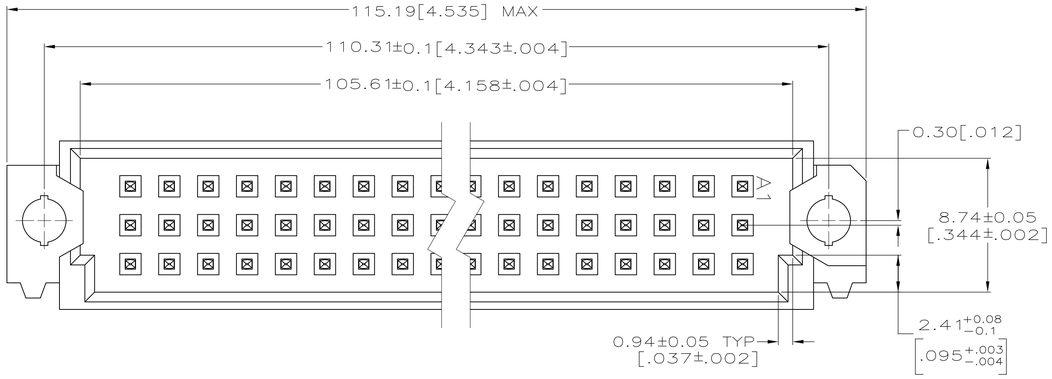

1. HOUSING MATERIAL: GLASS-FILLED POLYMER.
2. POST MATERIAL: COPPER ALLOY.
3. POST FINISH: DIN 41612 CLASS 2 IN CONTACT AREA. TIN PLATE ON POSTS.
4. MARKING ON THIS SIDE.
5. ACTION PIN POSTS REQUIRE 2.36[.093] MINIMUM THICK PC BOARD. RECOMMENDED PC BOARD HOLES ARE 1.151[.0453] DIA PLATED THROUGH WITH 0.02-0.08[.001-.003] COPPER AND 0.008[.0003] MINIMUM TIN-LEAD PLATING. FINISHED HOLE AFTER PLATING, 0.94-1.09[.037-.043] DIA.
6. PART NUMBER, DATE CODE MARKED THIS APPROXIMATE AREA.

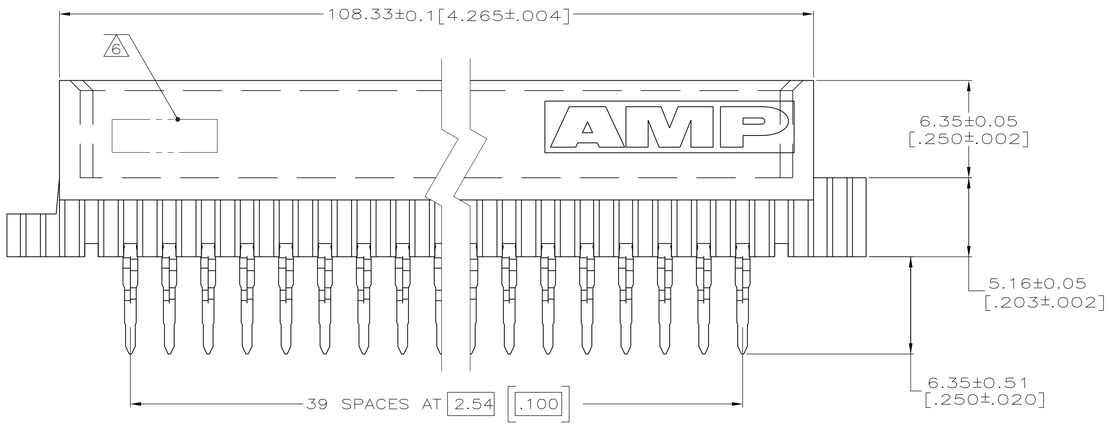

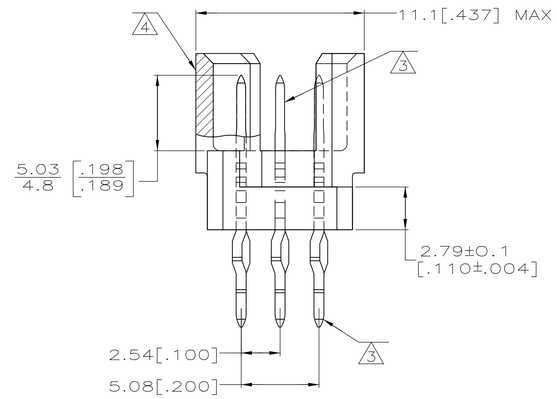

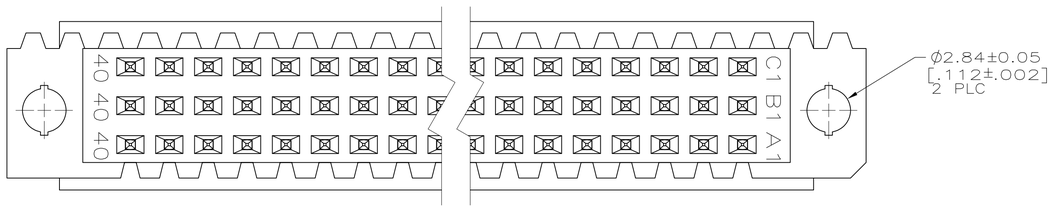

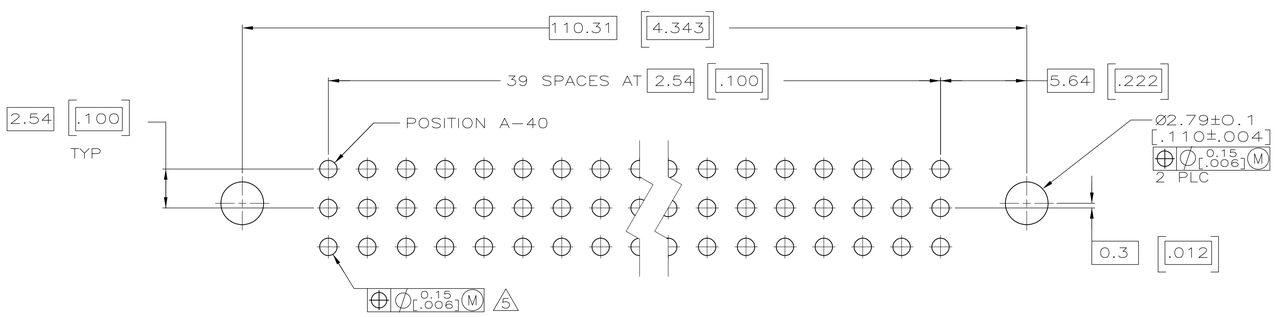

PC BOARD LAYOUT

1-40	X	X	X	120	5650921-5
POSITIONS LOADED	C	B	A	NO. OF LOADED POSITION	ASSY PART NUMBER
	ROWS LOADED				

THIS DRAWING IS A CONTROLLED DOCUMENT.

DIMENSIONS: mm [INCHES]

TOLERANCES UNLESS OTHERWISE SPECIFIED:
0 PLC ± -
1 PLC ± -
2 PLC ± 0.13[.005]
3 PLC ± -
4 PLC ± -
ANGLES ± -

MATERIAL 1 2
FINISH 3

DWN J. POLIGNONE 05MAY05
CHK A. SHARPE 05MAY05
APVD A. SHARPE 05MAY05
PRODUCT SPEC —
APPLICATION SPEC —
WEIGHT —

Tyco Electronics
Tyco Electronics Corporation
Harrisburg, Pa 17105-3608

NAME
ASSEMBLY, PIN, EUROCARD, TYPE R,
120 POSITION,
6.35[.250] PRESS-FIT POSTS

SIZE	CAGE CODE	DRAWING NO	RESTRICTED TO
A1	00779	C-5650921	—

CUSTOMER DRAWING | SCALE 5:1 | SHEET 1 OF 1 | REV 01

AMP 4805 REV 31MAR2000

Downloaded From Oneyac.com

单击下面可查看定价，库存，交付和生命周期等信息

>>TE Connectivity(泰科)

Downloaded From Oneyac.com