THIS DRAWING IS UNPUBLISHED. RELEASED FOR PUBLICATION 20
© COPYRIGHT 20 BY TYCO ELECTRONICS CORPORATION. ALL RIGHTS RESERVED.

LOC	DIST
GP	00

REVISIONS

P	LTR	DESCRIPTION	DATE	DWN	APVD
	A	NEW RELEASE	05FEB2008	RG	DO

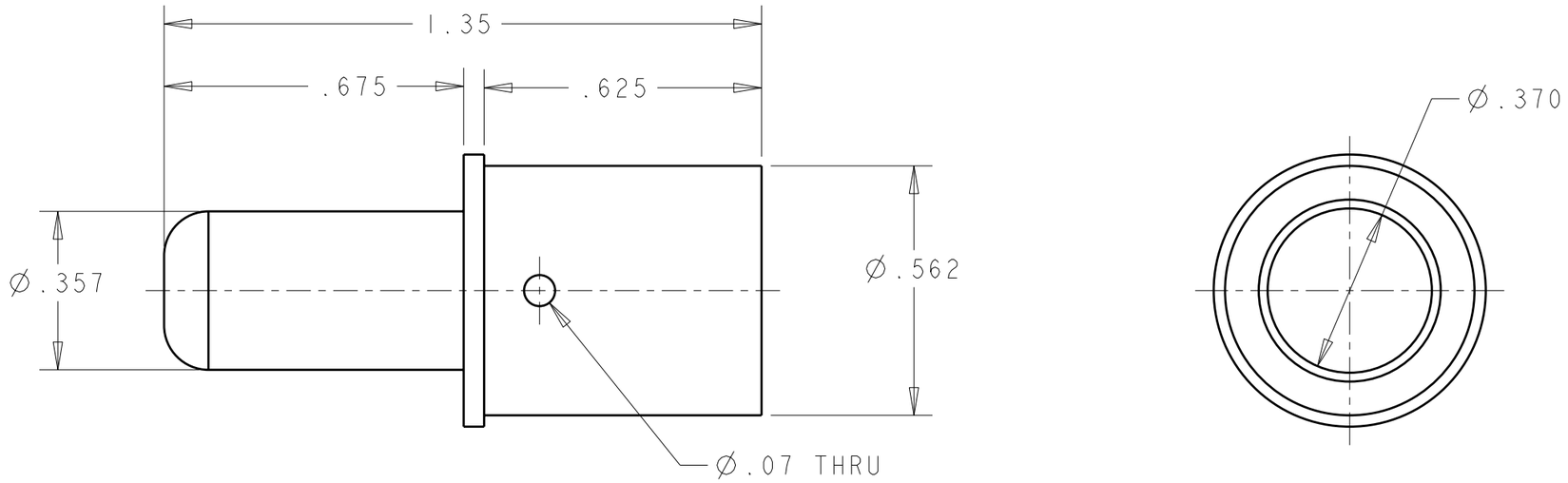

1. PART NUMBER CHANGES AND OR DESIGN CHANGES AFFECTING THE INTERCHANGEABILITY REQUIRE PRIOR TYCO ELECTRONICS APPROVAL AND AUTHORIZATION BY REVISION TO THIS DRAWING.

2. MATERIAL;
   COPPER ALLOY

3. FINISH:
   SLVER PLATE .000200 MIN THK. OVER NICKEL
   .000050 MIN. THK.

4. ITEMS PROVIDED TO THIS SPECIFICATION TO BE PERMANENTLY IDENTIFIED ON THE CONTAINER WITH THE FOLLOWING IDENTIFIER:

YEAR WEEK

TYCO ELECTRONICS P/N — XXXXXXX-X

DATE CODE (e.g. 0216) — XXXX

AS SHOWN	1926764-1
DESCRIPTION	PART NUMBER

THIS DRAWING IS A CONTROLLED DOCUMENT FOR TYCO ELECTRONICS CORPORATION IT IS SUBJECT TO CHANGE AND THE CONTROLLING ENGINEERING ORGANIZATION SHOULD BE CONTACTED FOR THE LATEST REVISION.

DIMENSIONS: INCHES

TOLERANCES UNLESS OTHERWISE SPECIFIED:

0 PLC	±-
1 PLC	±-
2 PLC	±.02
3 PLC	±.010
4 PLC	±-
ANGLES	±3

MATERIAL - 2

FINISH - 3

DWN 05FEB2008 R.GRZYBOWSKI
CHK 05FEB2008 D.ORRIS
APVD 05FEB2008 S.FLICKINGER
PRODUCT SPEC -
APPLICATION SPEC -
WEIGHT -

Tyco Electronics
Tyco Electronics
Harrisburg, PA 17105-3608

NAME
PIN CONTACT, SIZE No.0
SIZE No. 2 AWG, CRIMP REMOVABLE
.56 FRONT EXT., DRAWER

SIZE	CAGE CODE	DRAWING NO	RESTRICTED TO
A3	00779	C-1926764	-

CUSTOMER DRAWING | SCALE 3:1 | SHEET 1 OF 1 | REV A

ELCON DRAWER

AMP 1470-19 REV 31MAR2000

Downloaded From Oneyac.com

Pro/ENGINEER DRAWING

单击下面可查看定价，库存，交付和生命周期等信息

>>TE Connectivity(泰科)

Downloaded From Oneyac.com