THIS DRAWING IS UNPUBLISHED. RELEASED FOR PUBLICATION - ,- .
© COPYRIGHT - BY TYCO ELECTRONICS CORPORATION. ALL INTERNATIONAL RIGHTS RESERVED.

LOC	DIST
—	—

REVISIONS

P	LTR	DESCRIPTION	DATE	DWN	APVD
	A1	REVISED PER ECR-09-014493	30JUN09	HMR	GJ

1. SPECIFICATIONS: MAGNET WIRE RANGE; #18-#34 0.16-1.02mm [.006-.040] DIA COPPER. OTHER SIZES MAT BE ACCOMMODATED, CONSULT TYCO ELECTRONICS FOR APPROVAL.
2. POCKET RECOMMENDATION: 1601474.

3. THIS LENGTH TO BE COINED ON ALL 4 CORNERS WITH NO BURRS. MAX RADIUS AS SHOWN IN SECTION X-X

4. TIP MAY BE RADIUSED AND HAVE CONVEX SIDES WITHIN DIMENSIONS SHOWN.

5. TERMINAL APPLICATION TO COMPLY WITH TYCO ELECTRONICS SPECIFICATION 114-13166.

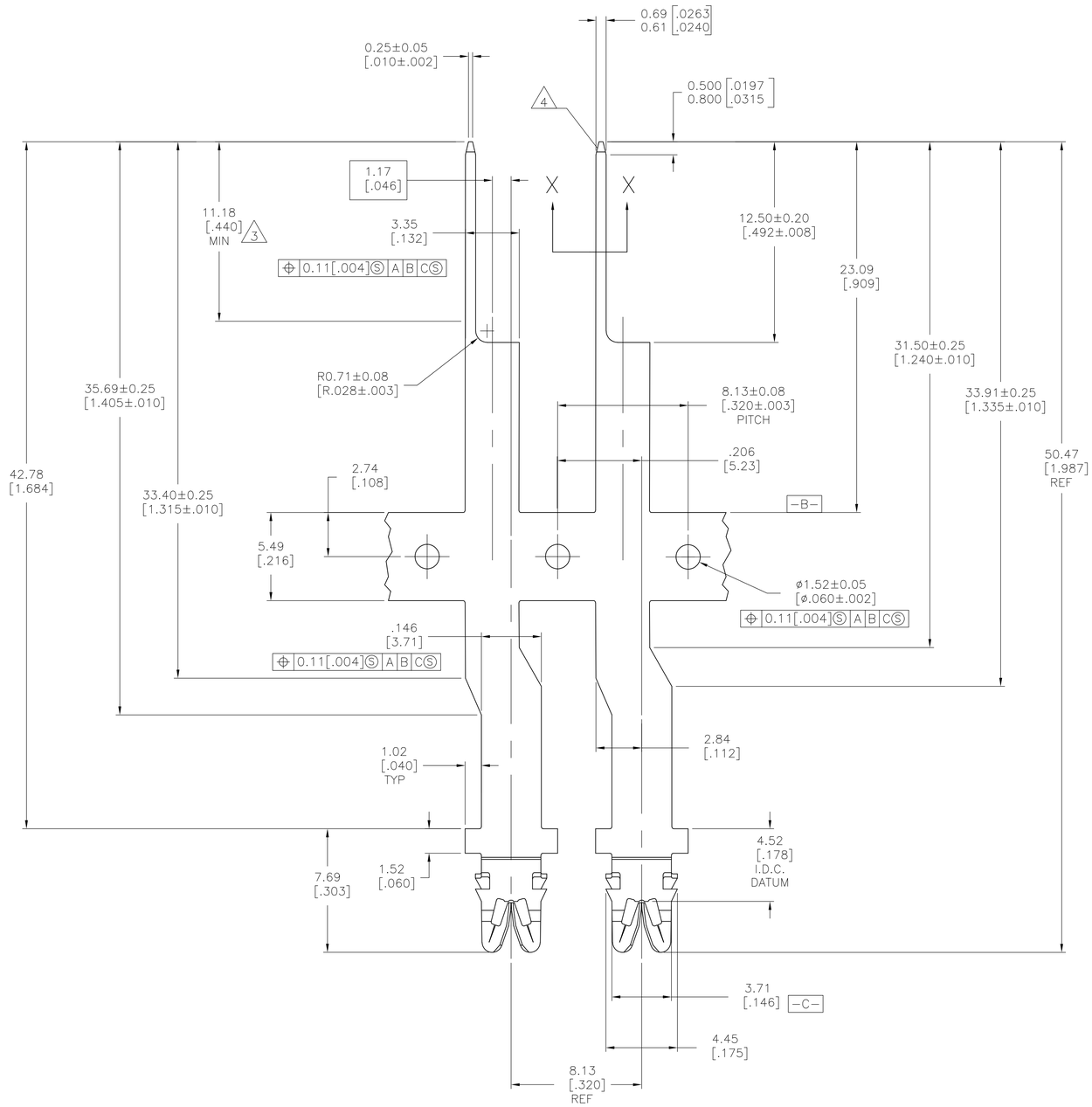

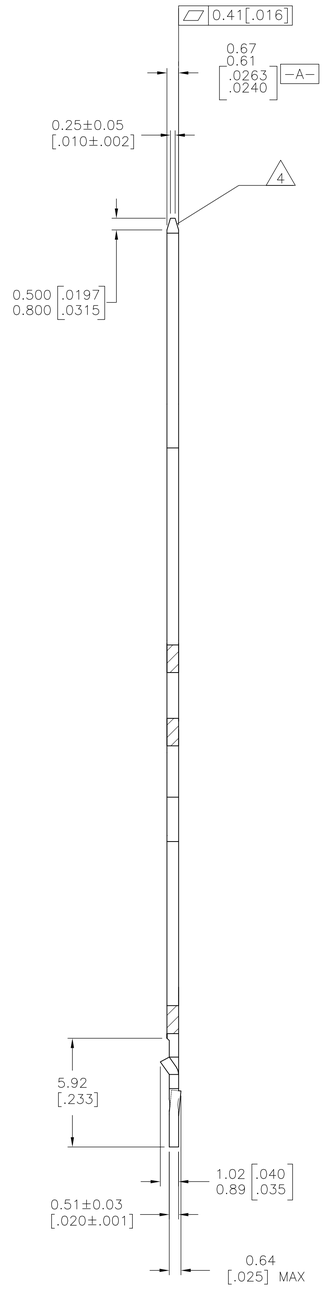

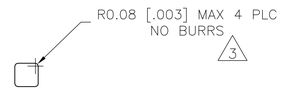

SECTION X-X
SCALE 12:1

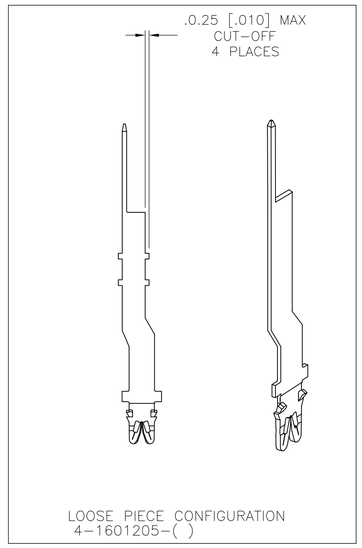

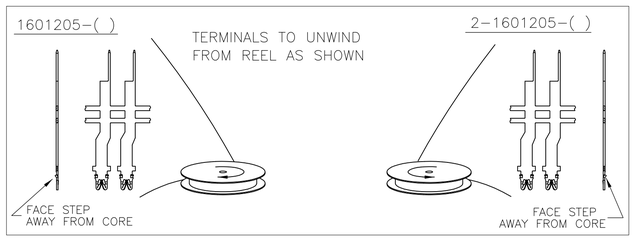

—	—
—	—
POST-TIN	1601205-2
FINISH	PART NUMBER

THIS DRAWING IS A CONTROLLED DOCUMENT.

DIMENSIONS: mm [INCHES]

TOLERANCES UNLESS OTHERWISE SPECIFIED:

0 PLC	± –
1 PLC	± 0.25[.01]
2 PLC	± 0.13[.005]
3 PLC	± –
4 PLC	± –
ANGLES	± 2°

MATERIAL: FULL HARD BRASS

FINISH: SEE TABLE

DWN JR RUTH 28APR05
CHK GENE JACONO 28APR05
APVD GENE JACONO 28APR05

PRODUCT SPEC: 108-2085

APPLICATION SPEC: — (5)

WEIGHT: —

CUSTOMER DRAWING

Tyco Electronics Corporation
Harrisburg, PA 17105-3608

NAME: .025 SQUARE OFFSET PIN STANDARD SIAMEZE TERMINAL

SIZE	CAGE CODE	DRAWING NO	RESTRICTED TO
A1	00779	C-1601205	—

SCALE	SHEET	REV
6:1	1 OF 1	A1

Downloaded From Oneyac.com

单击下面可查看定价，库存，交付和生命周期等信息

>>TE Connectivity(泰科)

Downloaded From Oneyac.com