THIS DRAWING IS UNPUBLISHED. RELEASED FOR PUBLICATION -,- .
© COPYRIGHT - By - ALL RIGHTS RESERVED.

LOC	DIST
AD	00

REVISIONS

P	LTR	DESCRIPTION	DATE	DWN	APVD
	B2	REVISED PER ECO-11-004917	11MAR11	RK	HMR

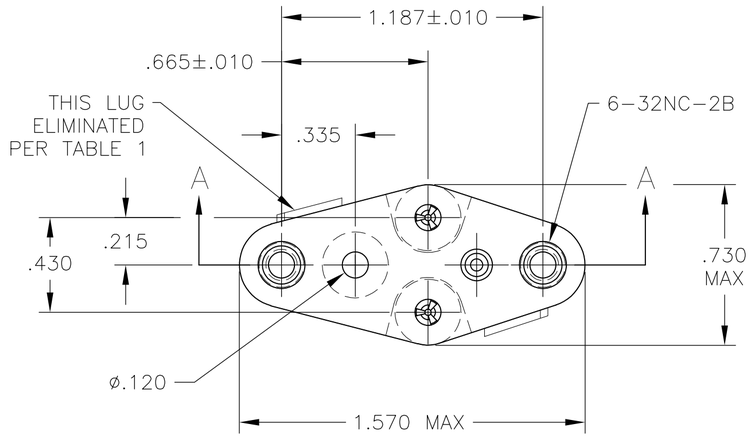

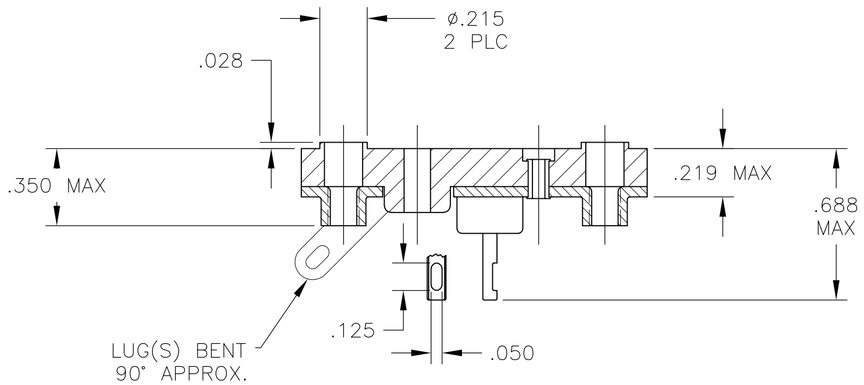

SECTION A-A

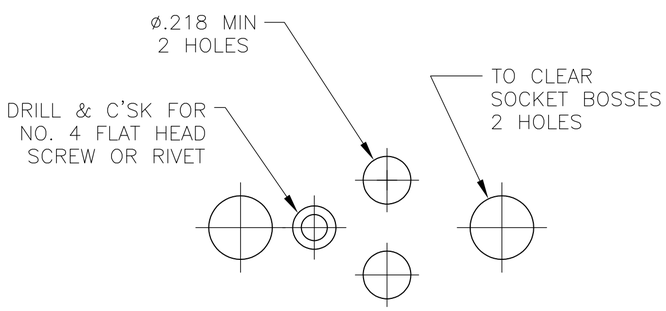

RECOMMENDED CHASSIS HOLE LAYOUT

SPECIFICATIONS:

MATERIALS-
INSULATOR: UL94V-O (SEE TABLE FOR MATERIAL)
CONTACT: BERYLLIUM COPPER (SEE TABLE FOR PLATING)

ELECTRICAL-
CONTACT RESISTANCE: GOLD - 15 MILLIOHMS, PER MIL-STD-12883
TIN- 25 MILLIOHMS MAX
CONTACT RATING: 10 AMPS DC
DIELECTRIC WITHSTANDING VOLTAGE- 1500 VOLTS(RMS)

MECHANICAL-
OPERATIONAL TEMPERATURE: DAP -67F TO +257F
(-55C TO +125C)

NOTES

1. INTERPRET DRAWING PER ASME Y14.5M-1994.
2. THIS ASSEMBLY IS INTENDED FOR USE WITH SEMI-CONDUCTORS PACKAGED WITHIN THE OUTLINE DIMENSIONS OF THE "TO-3".
3. LUG(S) IS AN INTERNAL PART OF SADDLE.
4. .000200 MIN THK TIN-LEAD PLATE OVER .000100 MIN THK COPPER PLATE.
5. .000030 MIN THK GOLD PLATE OVER .000050 MIN THK NICKEL PLATE.
6. .000500 MIN THK SILVER PLATE.
7. .000050 MIN THK GOLD PLATE OVER .000050 MIN THK NICKEL PLATE.
8. .000200 MIN THK MATTE TIN PLATE OVER .000100 MIN THK COPPER PLATE.

9 OBSOLETE PARTS: OBSOLETE CIS STREAMLINING PER D.RENAUD/D.SINISI

LUG QTY (SEE NOTE 3)	LEAD DIA +.003/-.002	INSULATOR MATERIAL	CONTACT PLATING	AUGAT PT. NO.	PART NUMBER
1	.060	DIALLYL PHTHALATE-GREEN OR BLUE	NOTE 5	8080-1G39-LF	9-1437504-9
1	.060	DIALLYL PHTHALATE-GREEN OR BLUE	NOTE 6	8080-1G37-LF	9-1437504-8
1	.060	PHENOLIC-BLACK	NOTE 6	8080-1G36-LF	6-6437504-2
1	.060	DIALLYL PHTHALATE-GREEN OR BLUE	NOTE 8	8080-1G35-LF	9-1437504-7
2	.060	DIALLYL PHTHALATE-GREEN OR BLUE	NOTE 5	8080-1G34-LF	9-1437504-6
2	.060	PHENOLIC-BLACK	NOTE 5	8080-1G33-LF	9-1437504-5
2	.060	PHENOLIC-BLACK	NOTE 6	8080-1G32-LF	9-1437504-4
2	.060	DIALLYL PHTHALATE-GREEN OR BLUE	NOTE 8	8080-1G31-LF	9-1437504-3
1	.040	DIALLYL PHTHALATE-GREEN OR BLUE	NOTE 5	8080-1G25-LF	9-1437504-1
1	.040	DIALLYL PHTHALATE-GREEN OR BLUE	NOTE 8	8080-1G24-LF	9-1437504-0
1	.060	DIALLYL PHTHALATE-GREEN OR BLUE	NOTE 5	8080-1G39	4-1437504-9
1	.060	PHENOLIC-BLACK	NOTE 5	8080-1G38	-
1	.060	DIALLYL PHTHALATE-GREEN OR BLUE	NOTE 6	8080-1G37	4-1437504-8
1	.060	PHENOLIC-BLACK	NOTE 6	8080-1G36	6-1437504-2
1	.060	DIALLYL PHTHALATE-GREEN OR BLUE	NOTE 4	8080-1G35	4-1437504-7
2	.060	DIALLYL PHTHALATE-GREEN OR BLUE	NOTE 5	8080-1G34	~~4-1437504-6~~
2	.060	PHENOLIC-BLACK	NOTE 5	8080-1G33	~~4-1437504-5~~
2	.060	PHENOLIC-BLACK	NOTE 6	8080-1G32	~~4-1437504-4~~
2	.060	DIALLYL PHTHALATE-GREEN OR BLUE	NOTE 4	8080-1G31	4-1437504-3
1	.040	PHENOLIC-BLACK	NOTE 7	8080-1G30	-
1	.040	PHENOLIC-BLACK	NOTE 6	8080-1G29	-
2	.040	PHENOLIC-BLACK	NOTE 7	8080-1G28	-
2	.040	PHENOLIC-BLACK	NOTE 6	8080-1G27	-
1	.040	DIALLYL PHTHALATE-GREEN OR BLUE	NOTE 5	8080-1G25	4-1437504-1
1	.040	DIALLYL PHTHALATE-GREEN OR BLUE	NOTE 4	8080-1G24	4-1437504-0
2	.040	DIALLYL PHTHALATE-GREEN OR BLUE	NOTE 4	8080-1G23	-

OBSOLETE 9

4-1437504-0

THIS DRAWING IS A CONTROLLED DOCUMENT.

DIMENSIONS: INCHES

TOLERANCES UNLESS OTHERWISE SPECIFIED:
0 PLC ± -
1 PLC ± -
2 PLC ± -
3 PLC ± -
4 PLC ± -
ANGLES ± -

MATERIAL -
FINISH -

DWN R BROWN 11APR03
CHK K WRIGHT 11APR03
APVD K WRIGHT 11APR03
PRODUCT SPEC —
APPLICATION SPEC —
WEIGHT —

TE Connectivity

NAME TRANSISTOR SOCKET

SIZE	CAGE CODE	DRAWING NO	RESTRICTED TO
A2	00779	C-4-1437504-0	—

CUSTOMER DRAWING | SCALE 2:1 | SHEET 1 OF 1 | REV B2

Downloaded From Oneyac.com

单击下面可查看定价，库存，交付和生命周期等信息

>>TE Connectivity(泰科)

Downloaded From Oneyac.com