THIS DRAWING IS UNPUBLISHED. RELEASED FOR PUBLICATION 2011
© COPYRIGHT2011 - ALL RIGHTS RESERVED.

LOC	DIST
A1	-

REVISIONS

P	LTR	DESCRIPTION	DATE	DWN	APVD
	A5	Teil ist neu GENERAL PART	04.06.02	Schwaeger	
	A6	Anbindung der Zentrierstifte geaendert	05.01.05	H.-J.Arnold	-
	A7	... convertion in PRO-E drowing	23FEB2012	-	VH.
	A8	Correction of 5POS. section	19NOV2018	GR	SZG

BESTELL-NR.	POS.	STUECK	BENENNUNG EINZELTEIL	WERKSTOFF	OBERFLAECHE FARBE
968814-2 (3)	4	1	Dichtung	Silikon-Koutschuk	natur
	3	1	Dichtung	Silikon-Koutschuk	orange
2-968814-2 (4)	2	16	TAB 3.0mm	CuZn30	versilbert
	1	1	Gehaeuse	PBT/ASA GF20	schwarz
968814-1 (3)	6	2	Filter Siemens AG B62110-A3007-X22	Ferrit	-
	5	1	Halterung	PBT/ASA GF20	schwarz
	4	1	Dichtung	Silikon-Koutschuk	natur
2-968814-1 (4)	3	1	Dichtung	Silikon-Koutschuk	orange
	2	16	TAB 3.0mm	CuZn30	versilbert
	1	1	Gehaeuse	PBT/ASA GF20	schwarz

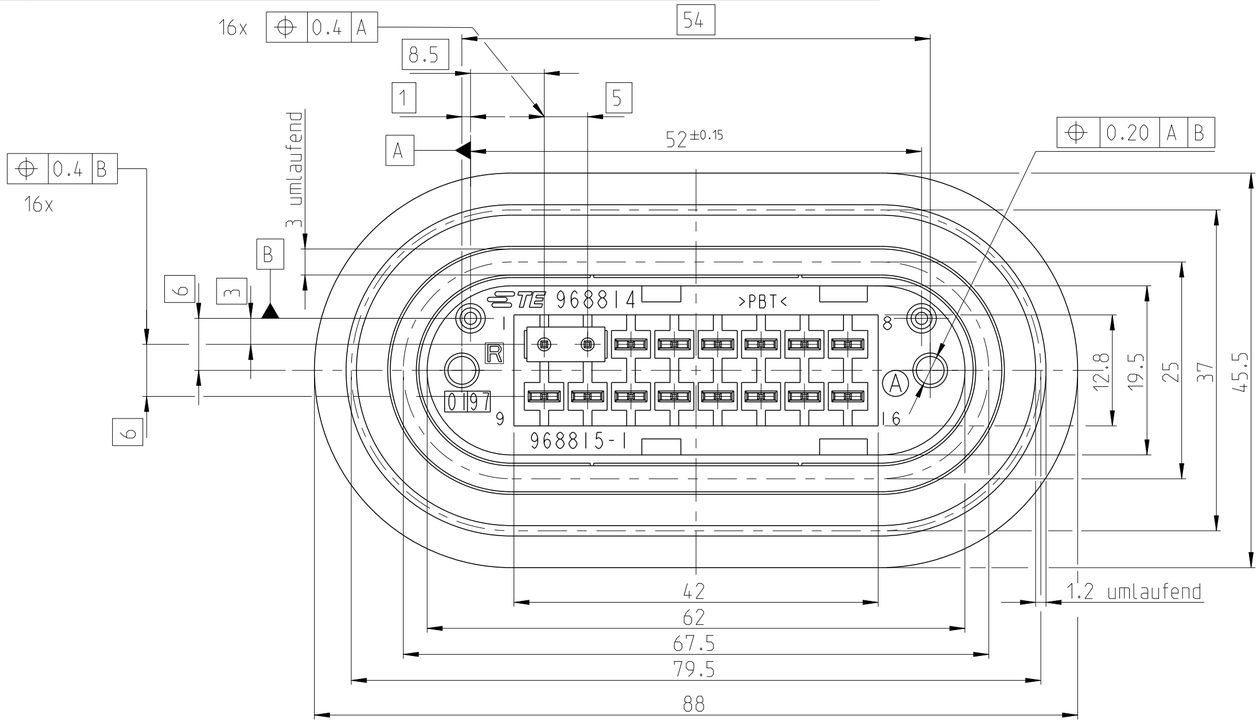

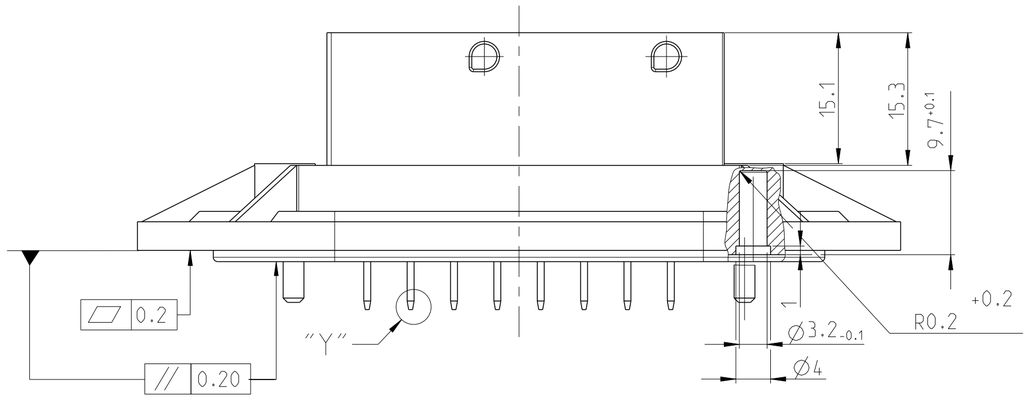

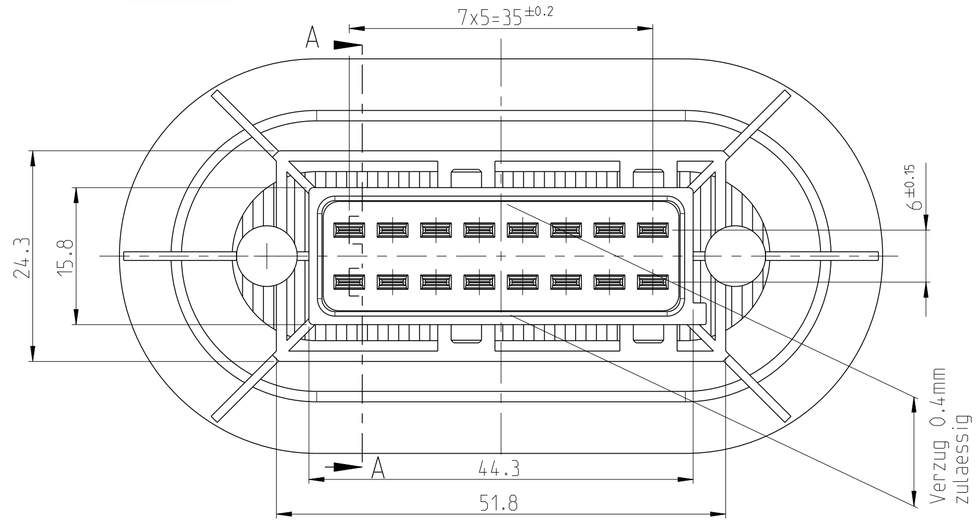

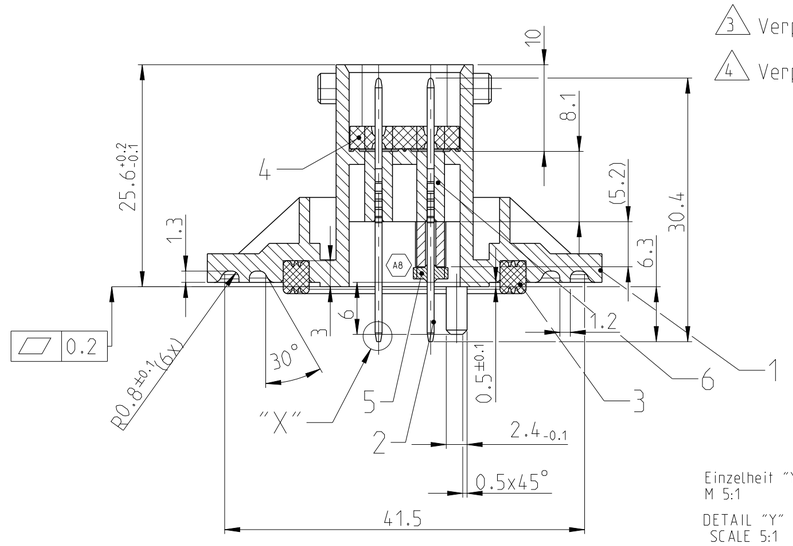

Einzelheit "Y"
M 5:1

DETAIL "Y"
SCALE 5:1

Diagonalmaß 1.1 ±0.05

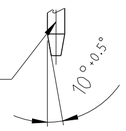

Einzelheit "X"
M 5:1

DETAIL "X"
SCALE 5:1

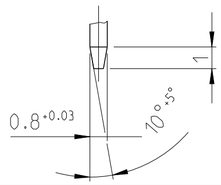

BEMERKUNGEN

1 Passend zu Gegenstecker AMP Nr.966168

2

(3) Verpackt in Produkttraeger in KLT

(4) Verpackt im Karton

THIS DRAWING IS A CONTROLLED DOCUMENT.

DIMENSIONS: mm

TOLERANCES UNLESS OTHERWISE SPECIFIED: ±0.3
0 PLC ±
1 PLC ±±
2 PLC ±±±
3 PLC ±±±±
4 PLC ±±±±±
ANGLES ±1°

MATERIAL -

FINISH -

DWN Schwaeger 20.01.97
CHK Holzmann -
APVD - -
PRODUCT SPEC -
APPLICATION SPEC -
WEIGHT -

TE Connectivity

NAME .118 TAB HEADER, 16POS 3.0 Messerleiste, 16 polig

SIZE A2 | CAGE CODE 00779 | DRAWING NO C-968814 | RESTRICTED TO

CUSTOMER DRAWING | SCALE 2:1 | SHEET 1 OF 1 | REV A8

1471-9 (3/11)

Downloaded From Oneyac.com

单击下面可查看定价，库存，交付和生命周期等信息

>>TE Connectivity(泰科)

Downloaded From Oneyac.com