THIS DRAWING IS UNPUBLISHED. RELEASED FOR PUBLICATION -,- .
© COPYRIGHT - By - ALL RIGHTS RESERVED.

LOC	DIST
AJ	53

REVISIONS

P	LTR	DESCRIPTION	DATE	DWN	APVD
	B1	ECR-12-005726	27MAR12	RK	MY

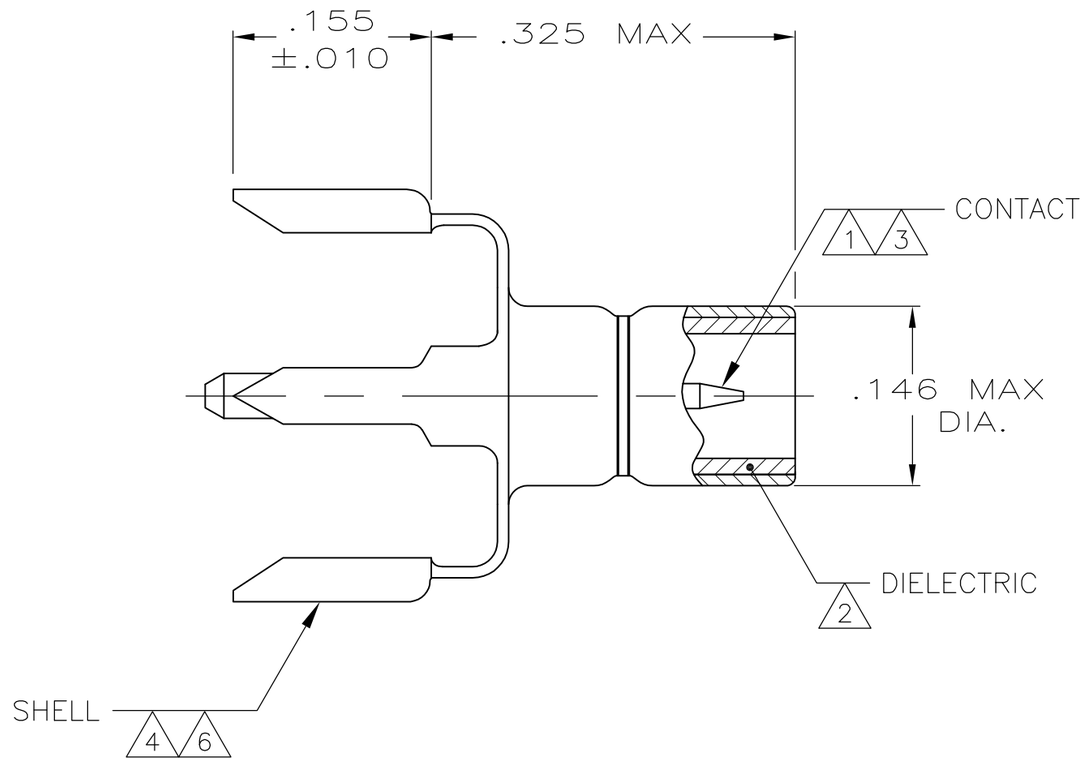

1. BRASS PER ASTM-B-16.
2. PTFE PER ASTM-D-1710.
3. GOLD PLATE PER ASTM-B-488.
4. TIN PLATE PER ASTM-B-545.
5. NICKEL PLATE PER QQ-N-290.
6. BRASS PER ASTM-B-36.

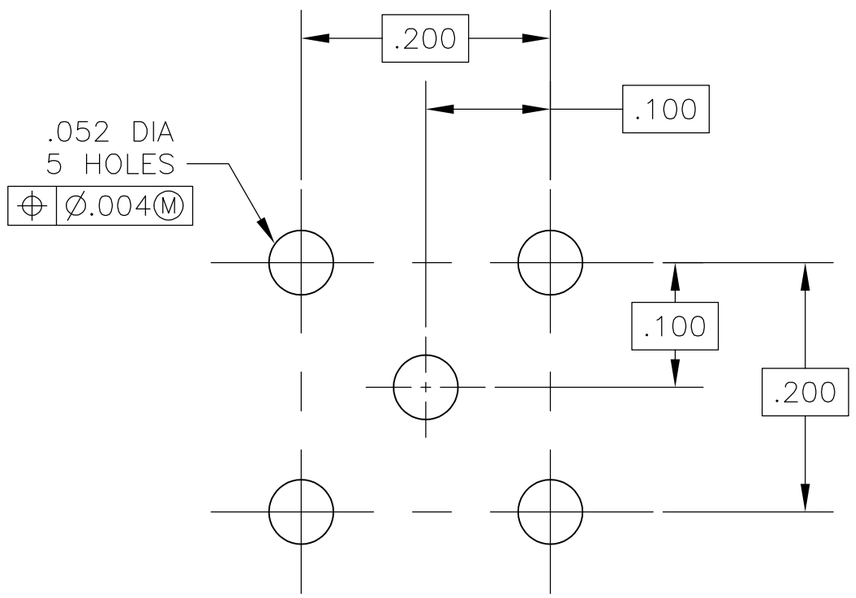

RECOMMENDED PCB HOLE CONFIGURATION

221111-1

PART NUMBER

THIS DRAWING IS A CONTROLLED DOCUMENT.

DIMENSIONS: INCHES

TOLERANCES UNLESS OTHERWISE SPECIFIED:
0 PLC ± -
1 PLC ± -
2 PLC ± -
3 PLC ± .002
4 PLC ± -
ANGLES ± -

MATERIAL: SEE NOTES

FINISH: SEE NOTES

DWN	T.SMITH	2-29-84
CHK	D.S.HEIDE	3-2-84
APVD	R.E.CAPP	3-2-84
PRODUCT SPEC	—	
APPLICATION SPEC	—	
WEIGHT	—	

TE Connectivity

NAME: JACK,PCB, VERTICAL SMB

SIZE	CAGE CODE	DRAWING NO	RESTRICTED TO
A3	00779	C-221111-1	—

CUSTOMER DRAWING

SCALE	SHEET	REV
8:1	1 OF 1	B1

1470-19 (3/11)

Downloaded From Oneyac.com

单击下面可查看定价，库存，交付和生命周期等信息

>>TE Connectivity(泰科)

Downloaded From Oneyac.com