© - TE Connectivity. All Rights Reserved.

REVISIONS					
P	LTR	DESCRIPTION	DATE	DRN	APVD
	J	REV PER ECO 20-007904	11-25-20	CT	DM

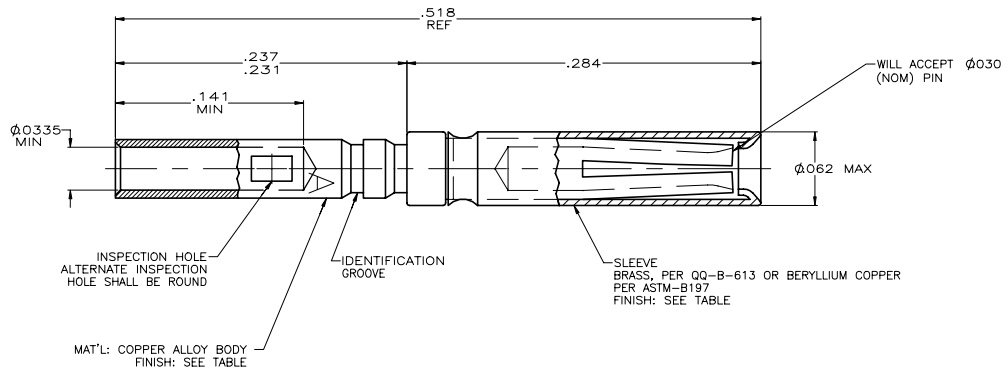

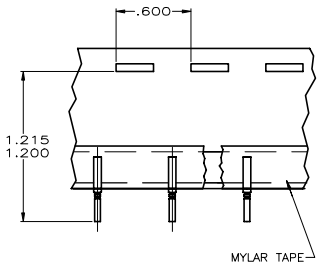

TAPE MOUNTED
-2 ONLY

1. WIRE BARREL WILL ACCEPT #22-28 AWG WIRE.
2. CRIMPING TOOL - USE HAND TOOL M22520/2-01 (AMP P/N 601966-1) WITH POSITIONER M22520/2-06 (AMP P/N 601966-4). SEE AMP INSTRUCTION SHEET, IS7516, FOR CRIMPING INSTRUCTIONS.
3. ---
4. INSERTION/EXTRACTION TOOL AMP P/N 91067-1.
5. USE AMP - TAPEMATIC STRIPPER/CRIMPER MACHINE NUMBER 599406-7 WITH FUNNEL NUMBER 125905-2.
6. SLEEVE MAY BE CRIMPED OR DIMPLED TO BODY.
7. PLATING: GOLD PER ASTM-B-488 (TYPEII) OVER NICKEL PER QQ-N-290.
8. PLATING: GOLD PER ASTM-B-488 (TYPEII) OVER COPPER PER AMS 2418, .000050 MIN THK
9. CONTACTS QUALIFIED TO GSFC-S-311-P-4/08, NASA P/N G-08-S1
10. CONTACTS MEET REQUIREMENTS OF AS39029/57-354

REMARKS	DESCRIPTION	FINISH	PART NO.
2	AS SHOWN	7	206071-4
9 5	CONTACT ON TAPE	SAME AS -1	206071-2
9 2	AS SHOWN	8	206071-1

THIS DRAWING IS A CONTROLLED DOCUMENT.

DIMENSIONS: INCHES

TOLERANCES UNLESS OTHERWISE SPECIFIED:
0 PLC ± –
1 PLC ± –
2 PLC ± –
3 PLC ± .005
4 PLC ± –
ANGLES ± –

MATERIAL: SEE CALLOUT
FINISH: SEE TABLE

DRN T.THOMPSON 06-03-94
CHK T.KINSEY 06-03-94
APVD F.KINSEY 06-03-94
PRODUCT SPEC —
APPLICATION SPEC —
WEIGHT 0.000000
CUSTOMER DRAWING

TE Connectivity

NAME: CONTACT ASSEMBLY, SOCKET, SIZE 22D
—

SIZE	CAGE CODE	DRAWING NO	RESTRICTED TO
A1	00779	C-206071	—

SCALE 20:1 SHEET 1 OF 1 REV J

4805 (1/15)

Downloaded From Oneyac.com

单击下面可查看定价，库存，交付和生命周期等信息

>>TE Connectivity(泰科)

Downloaded From Oneyac.com