DRAWING MADE IN THIRD ANGLE PROJECTION

LOC G DIST 14

THIS DRAWING IS UNPUBLISHED. RELEASED FOR PUBLICATION , 19 .

© COPYRIGHT — BY —

REVISIONS						
P	F	ZONE	LTR	DESCRIPTION	DATE	APPROVED
			K1	REVISED PER ECO-11-005294	08APR11	HMR

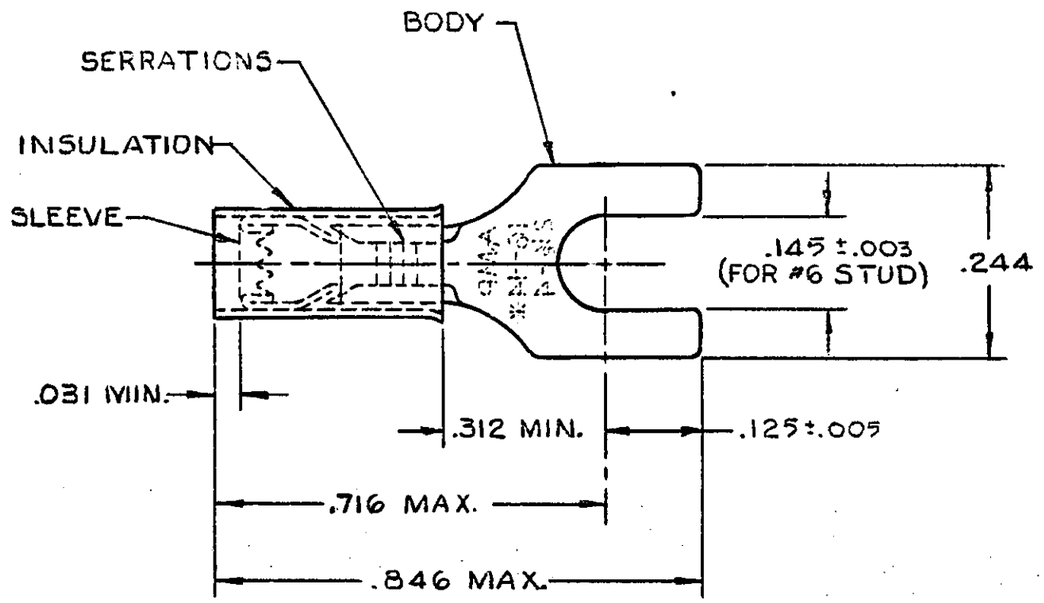

1 WIRE INSULATION DIA: SEE TABLE.

2 TONGUE MATERIAL THK.: .031 ±.002

	WIRE INS. DIA.	QUANTITY	DESCRIPTION	PART NO
	.115-.170	100	LOOSE PC, BOX	8-328281-1
DBSOLETE	~~.115-.170~~	~~100~~	~~ON TAPE, SM. BOX~~	~~1-328281-4~~
OBSOLETE	.115-.170	1000	ON TAPE, LG. BOX	1-328281-3
OBSOLETE	~~.105-.170~~	~~5000~~	~~ON TAPE, REEL~~	~~1-328281-2~~
	.115-.170	5000	ON TAPE, REEL	1-328281-1
OBSOLETE	~~.105-.170~~	~~—"—~~	~~LOOSE PIECE~~	~~1-328281-0~~
	.115-.170	—"—	LOOSE PIECE	328281

UNLESS OTHERWISE SPECIFIED DIMENSIONS ARE IN INCHES.
TOLERANCES ON:
DECIMALS ± .008
ANGLES ± —

MATERIAL
INSULATION:
NYLON — BLUE
BODY & SLEEVE:
COPPER (QQ-C-576)
FINISH
BODY & SLEEVE
TIN PL (MIL-T-10727)
.000100 MIN. THK.

CONTRACT NO
DR UTA/RFB 10-4-85
CHK P. Mutyalearch 2-13-86
APPD Mail/ram/13:1 2-13-86
APPD
DSGN APPD
OTHER APPD

TE Connectivity

NAME TERMINAL
P.I.D.G., SPADE
WIRE SIZE: 16-14

SIZE	FSCM NO	DRAWING NO
B	00779	328281

SCALE NTS SHEET 1 OF 1

CUSTOMER DRAWING

Downloaded From Oneyac.com

单击下面可查看定价，库存，交付和生命周期等信息

>>TE Connectivity(泰科)

Downloaded From Oneyac.com