THIS DRAWING IS UNPUBLISHED. RELEASED FOR PUBLICATION 20
© COPYRIGHT 20 BY TYCO ELECTRONICS CORPORATION. ALL RIGHTS RESERVED.

LOC J DIST -

REVISIONS 変更

P	LTR	DESCRIPTION	ECN	DATE	DWN	APVD
	0	RELEASED	FJ00-1040-02	15MAY02	K.S	K.A

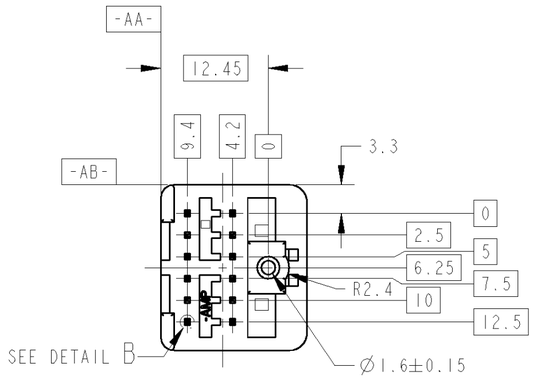

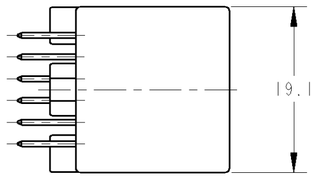

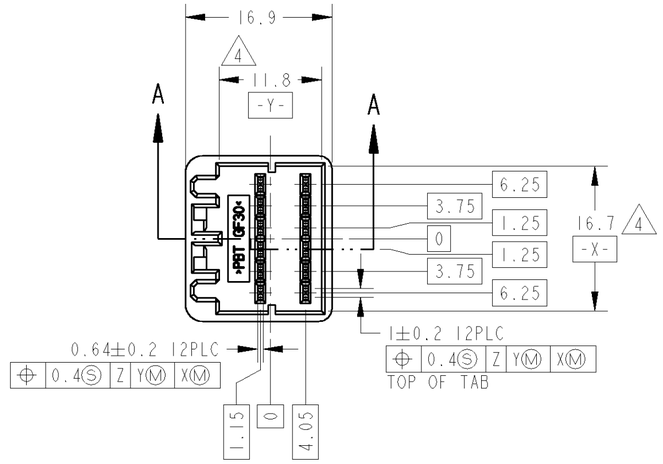

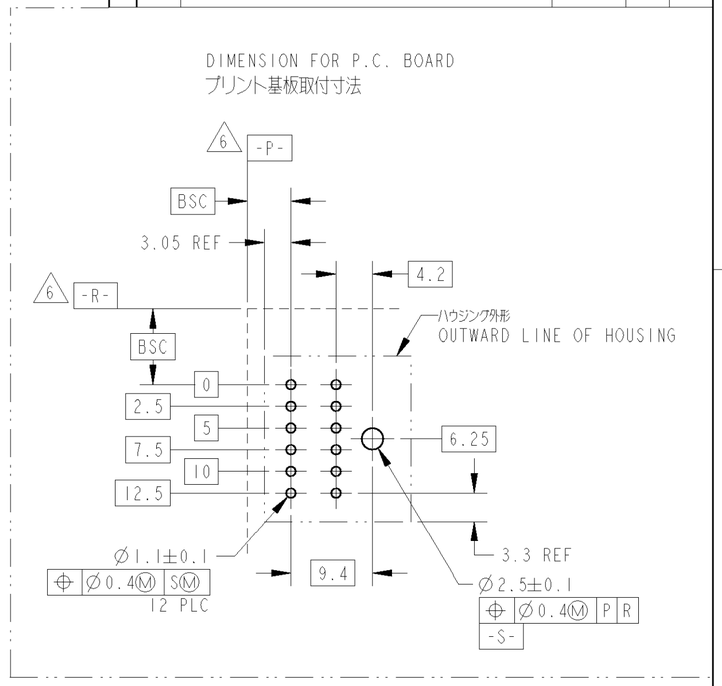

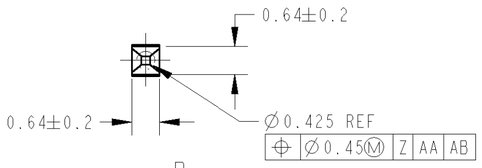

DETAIL B
SCALE 10:1

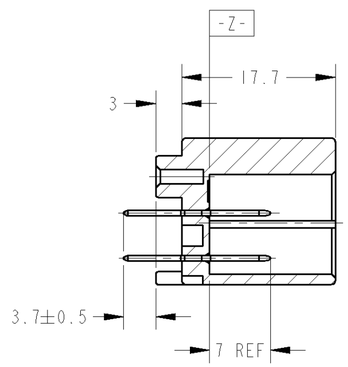

A-A

1. APPLICABLE P.C.B. BOARD THICKNESS ; 1.6mm
2. RECOMMENDED MOUNTING SCREW 2mm DIA, 6mm LENGTH MAX.
   PAN HEAD, CLASS 2 TAPPING SCREW SPECIFIED
   IN JIS B1122.
   (RECOMMENDED TIGHTENING TORQUE ; 0.22-0.27N.m)
3. MATING PLUG HOUSING ; PN 175965

4 TO BE MEASURED BETWEEN -Z- AND 2.
5. PACKING STYLE : INNER - PVC TUBE
   OUTER - PAPER BOX

6 DATUMS AND BASIC DIMENSION ESTABLISHED BY CUSTOMER

1. 適用プリント基板厚 ; 1.6mm
2. 推奨取付ネジ ; JIS B1122 タッピングネジ
   なべ2種 呼び径2 長さ6mm
   (推奨締め付けトルク ; 0.22~0.27N.m)
3. 嵌合相手ハウジング ; PN 175965

4 -Z- 面から2mmの範囲で測定
5. 梱包形態 ; 内装 - PVCチューブ
   外装 - ダンボール

6 データム及び基準寸法は顧客制定による

PRE-TINNED 錫メッキ	BLACK 黒	1565543-1
FINISH OF CONTACT コンタクト仕上げ	COLOR 色	PART NUMBER 型番

THIS DRAWING IS A CONTROLLED DOCUMENT FOR TYCO ELECTRONICS CORPORATION IT IS SUBJECT TO CHANGE AND THE CONTROLLING ENGINEERING ORGANIZATION SHOULD BE CONTACTED FOR THE LATEST REVISION.

DIMENSIONS: 単位: 桁 mm

TOLERANCES UNLESS OTHERWISE SPECIFIED:
一般公差: ±0.3
0 PLC ±
1 PLC ±0.5
2 PLC ±0.13
3 PLC ±0.013
4 PLC ±0.0001
ANGLES ±3°00′

MATERIAL 材料: PBT
FINISH 仕上: SEE TABLE

DWN K.SHIGA 15MAY02
CHK K.ASAI 15MAY02
APVD K.ASAI 15MAY02
PRODUCT SPEC 製品規格: 108-5281
APPLICATION SPEC 取付適用規格: -
WEIGHT 4.5 g

tyco Electronics
Tyco Electronics AMP K.K.
Kawasaki, Japan

NAME 名称: 12POSITIONS CAP HOUSING ASSEMBLY 040 MULTILOCK CONNECTOR MK-II VERTICAL TYPE

SIZE A2 | CAGE CODE 00779 | DRAWING NO 書号 C-1565543 | RESTRICTED TO -

CUSTOMER DRAWING | SCALE 尺度 2:1 | SHEET 1 OF 1 | REV 0

AMP 1471-9 REV 31MAR2000

Downloaded From Oneyac.com

Pro/ENGINEER DRAWING

单击下面可查看定价，库存，交付和生命周期等信息

>>TE Connectivity(泰科)

Downloaded From Oneyac.com