THIS DRAWING IS UNPUBLISHED. RELEASED FOR PUBLICATION -,- .
© COPYRIGHT - BY TYCO ELECTRONICS CORPORATION. ALL INTERNATIONAL RIGHTS RESERVED.

LOC	DIST
AD	00

REVISIONS

P	LTR	DESCRIPTION	DATE	DWN	APVD
	F	REVISED PER ECO-11-000045	04JAN11	DH	DY

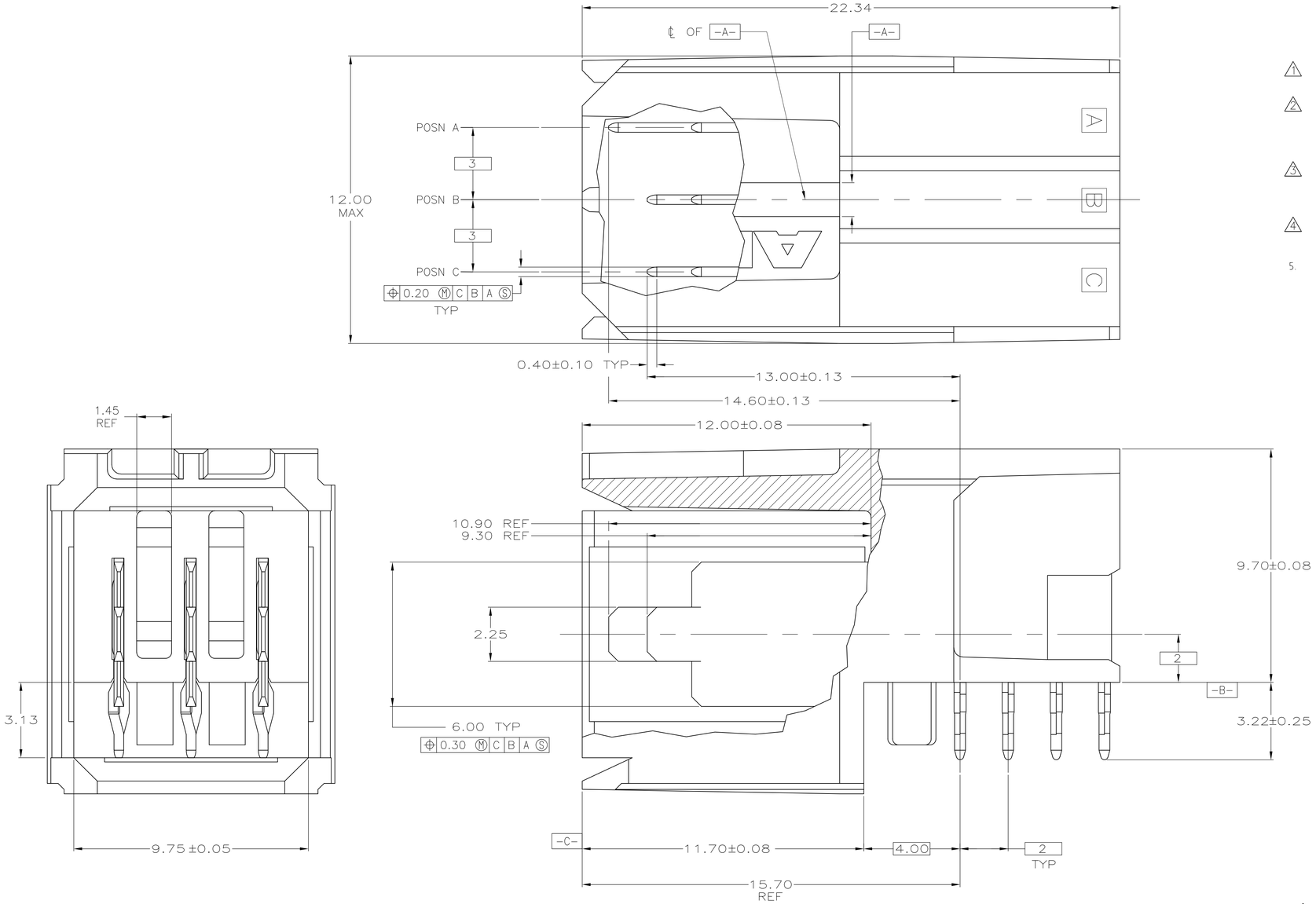

1. MATERIAL: HOUSING: POLYESTER. COLOR: GRAY. UL 94V-0.
   CONTACT: PHOSPHOR BRONZE.
2. FINISH: CONTACT MATING AREA: 1.27μm MIN GOLD OR 0.08μm MIN GOLD OVER 0.76μm MIN PALLADIUM-NICKEL.
   ACTION PIN AREA: 0.5μm MIN TIN LEAD PLATE, ALL OVER 1.27μm MIN NICKEL UNDERPLATE.
3. FINISH: CONTACT LUBRICATION WITH BELLCORE APPROVED LUBRICANT. TECHNICAL REFERENCE: TR-NWT-001217 ISSUE 1, SEPT 1992.
4. REFERENCE APPLICATION SPEC 114-1103 FOR RECOMMENDED PLATED THRU HOLE DIAMETER AND PLATING THICKNESSES.
5. CURRENT RATING 10A/CONTACT PER PRODUCT SPEC 108-1651.

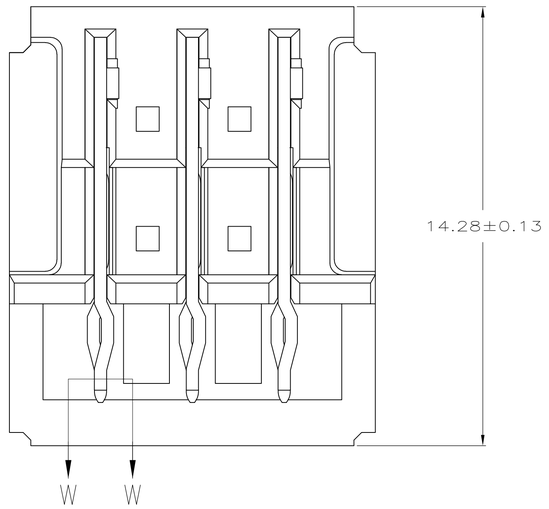

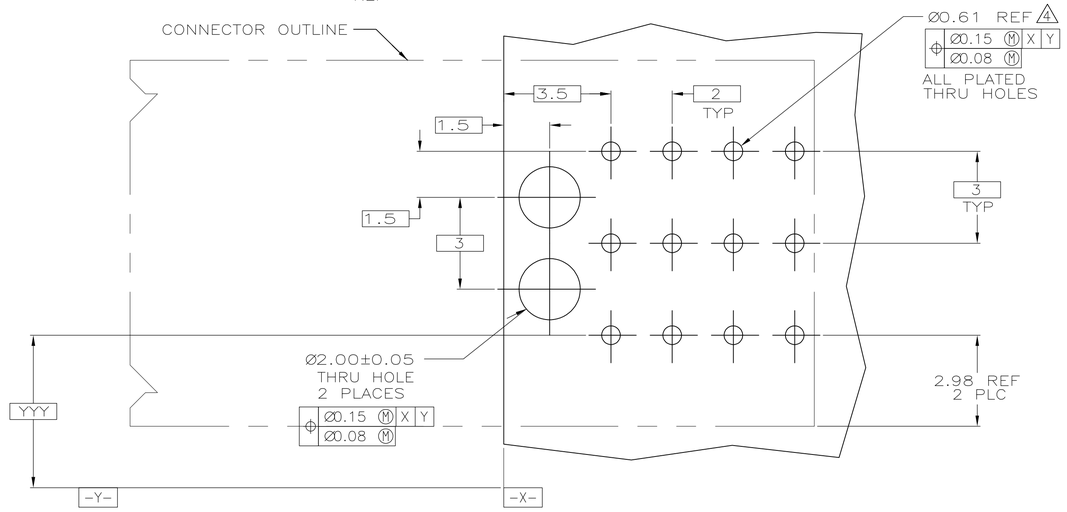

RECOMMENDED PCB HOLE LAYOUT

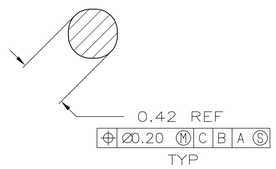

SECTION W-W
SCALE 40:1

223968-1
PART NUMBER

THIS DRAWING IS A CONTROLLED DOCUMENT.

DIMENSIONS: mm

TOLERANCES UNLESS OTHERWISE SPECIFIED:
0 PLC ± -
1 PLC ± -
2 PLC ± 0.13
3 PLC ± -
4 PLC ± -
ANGLES ± -

MATERIAL 1
FINISH 2 3

DWN J.LOCONDRO 21FEB97
CHK R.W.FLICKER 21FEB97
APVD R.W.FLICKER 21FEB97
PRODUCT SPEC —
APPLICATION SPEC —
WEIGHT —
CUSTOMER DRAWING

Tyco Electronics
Tyco Electronics Corporation
Harrisburg, PA 17105-3608

NAME
ASSEMBLY, RIGHT ANGLE HEADER, W/ RETENTION PEGS, UNIVERSAL POWER MODULE

SIZE	CAGE CODE	DRAWING NO	RESTRICTED TO
A1	00779	C-223968	—

SCALE 10:1 SHEET 1 OF 1 REV F

Downloaded From Oneyac.com

单击下面可查看定价，库存，交付和生命周期等信息

>>TE Connectivity(泰科)

Downloaded From Oneyac.com