THIS DRAWING IS UNPUBLISHED. RELEASED FOR PUBLICATION -.- .
© COPYRIGHT - L ALL RIGHTS RESERVED.

LOC	DIST
CM	00

REVISIONS

P	LTR	DESCRIPTION	DATE	DWN	APVD
	N	REVISED PER ECR-20-000727	22MAY2020	PC	SW

1. MATERIAL: CONNECTOR-NYLON UL94V-2 (GREEN). CONTACTS-0.30 [.012] THICK COPPER ALLOY 0.00076 [.000030] GOLD OR 0.00076[.000030] TOTAL GOLD FLASH OVER PALLADIUM NICKEL, PER TE CONNECTIVITY'S DISCRETION, IN CONTACT AREA WITH BRIGHT TIN-LEAD FOR 641240-2 THRU 2-641240-8, MATTE WHISKER MITIGATED TIN FOR 3-641240-2 THRU 5-641240-8 OVER NICKEL UNDERPLATE.
2. CONTACTS ACCEPT 28 AWG WIRE WITH 1.52 [.060] MAX INSULATION DIAMETER.
3. CONTACTS MUST ACCEPT 0.64±0.03 [.025±.001] SQUARE POST AND REMAIN LOCKED IN POSITION.
4. IDENTIFICATION NUMBER FOR LAST CIRCUIT MAY NOT APPEAR ON ALL ASSEMBLIES.
5. DIMENSIONS IN BRACKETS ARE IN INCHES.
6. HOUSING FEATURES ARE: CLOSED END WITH LOCKING RAMP.
7. OBSOLETE PARTS: OBSOLETE CIS STREAMLINING PER D.RENAUD/D.SINISI

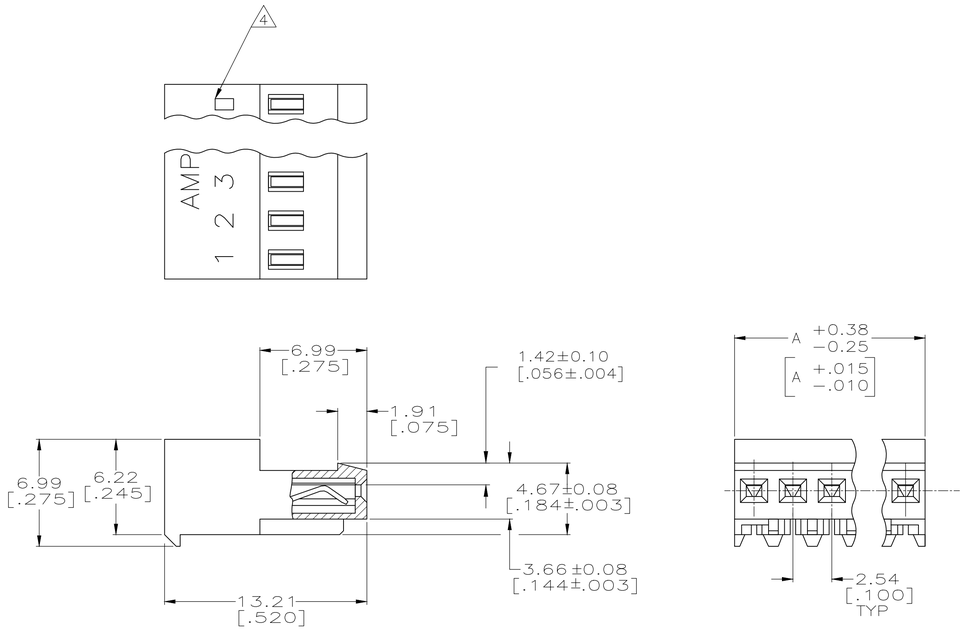

LEAD FREE

DIM A	NO.OF POSN	ASSEMBLY
71.12 [2.800]	28	5-641240-8
68.58 [2.700]	27	5-641240-7
66.04 [2.600]	26	5-641240-6
63.50 [2.500]	25	5-641240-5
60.96 [2.400]	24	5-641240-4
58.42 [2.300]	23	5-641240-3
55.88 [2.200]	22	5-641240-2
53.34 [2.100]	21	5-641240-1
50.80 [2.000]	20	5-641240-0
48.26 [1.900]	19	4-641240-9
45.72 [1.800]	18	4-641240-8
43.18 [1.700]	17	4-641240-7
40.64 [1.600]	16	4-641240-6
38.10 [1.500]	15	4-641240-5
35.56 [1.400]	14	4-641240-4
33.02 [1.300]	13	4-641240-3
30.48 [1.200]	12	4-641240-2
27.94 [1.100]	11	4-641240-1
25.40 [1.000]	10	4-641240-0
22.86 [.900]	9	3-641240-9
20.32 [.800]	8	3-641240-8
17.78 [.700]	7	3-641240-7
15.24 [.600]	6	3-641240-6
12.70 [.500]	5	3-641240-5
10.16 [.400]	4	3-641240-4
7.62 [.300]	3	3-641240-3
5.08 [.200]	2	3-641240-2

SUPERCEDED 7

SUPERCEDED 7

CONTAINS LEAD

DIM A	NO.OF POSN	ASSEMBLY
71.12 [2.800]	28	2-641240-8
68.58 [2.700]	27	2-641240-7
66.04 [2.600]	26	2-641240-6
63.50 [2.500]	25	2-641240-5
60.96 [2.400]	24	2-641240-4
58.42 [2.300]	23	2-641240-3
55.88 [2.200]	22	2-641240-2
53.34 [2.100]	21	2-641240-1
50.80 [2.000]	20	2-641240-0
48.26 [1.900]	19	1-641240-9
45.72 [1.800]	18	1-641240-8
43.18 [1.700]	17	1-641240-7
40.64 [1.600]	16	1-641240-6
38.10 [1.500]	15	1-641240-5
35.56 [1.400]	14	1-641240-4
33.02 [1.300]	13	1-641240-3
30.48 [1.200]	12	1-641240-2
27.94 [1.100]	11	1-641240-1
25.40 [1.000]	10	1-641240-0
22.86 [.900]	9	641240-9
20.32 [.800]	8	641240-8
17.78 [.700]	7	641240-7
15.24 [.600]	6	641240-6
12.70 [.500]	5	641240-5
10.16 [.400]	4	641240-4
7.62 [.300]	3	641240-3
5.08 [.200]	2	641240-2

THIS DRAWING IS A CONTROLLED DOCUMENT.

DIMENSIONS: mm [INCHES]

TOLERANCES UNLESS OTHERWISE SPECIFIED:
0 PLC ±
1 PLC ±
2 PLC ± 0.13 [.005]
3 PLC ±
4 PLC ±
ANGLES ±

MATERIAL 1 FINISH 1

DWN	S. HOOVER	28-DEC-2004
CHK	D. BOSSI	28-DEC-2004
APVD	D. BOSSI	28-DEC-2004
PRODUCT SPEC	108-1050	
APPLICATION SPEC	114-1019	
WEIGHT		

TE Connectivity

NAME: MTA .100 CONNECTOR ASSEMBLY 28 AWG, STANDARD

SIZE	CAGE CODE	DRAWING NO	RESTRICTED TO
A1	00779	C-641240	

CUSTOMER DRAWING | SCALE 5:1 | SHEET 1 OF 1 | REV N

Downloaded From Oneyac.com

单击下面可查看定价，库存，交付和生命周期等信息

>>TE Connectivity(泰科)

Downloaded From Oneyac.com