247329 ◆ 247329

DRAWING MADE IN THIRD ANGLE PROJECTION

USED ON 248010

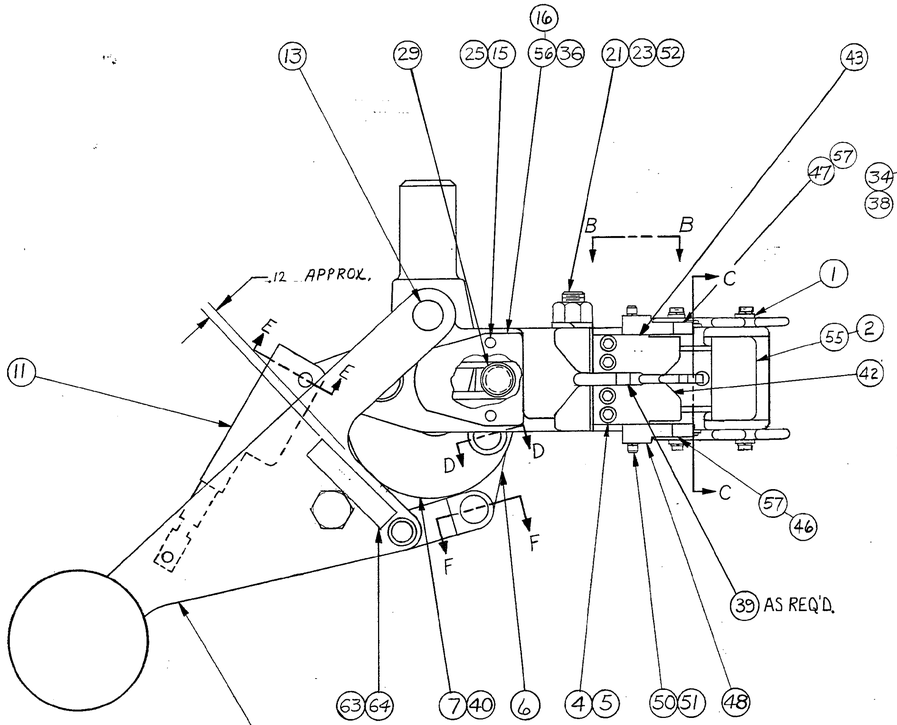

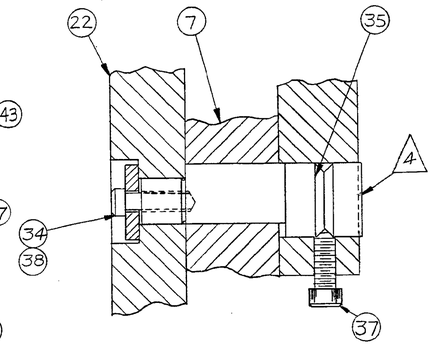

SECTION A-A

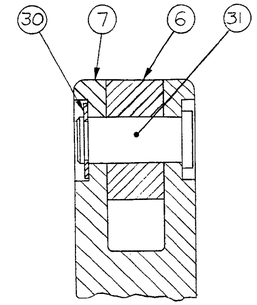

SECTION D-D

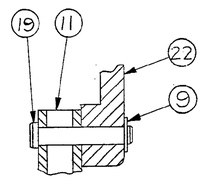

SECTION E-E

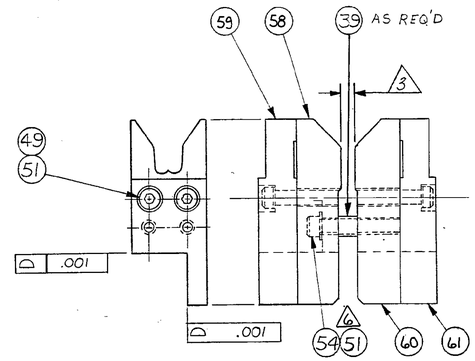

VIEW B-B FOR-3
2:1

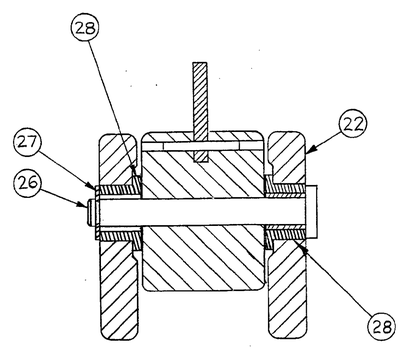

SECTION C-C

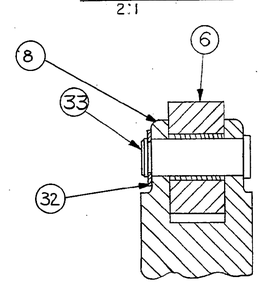

SECTION F-F

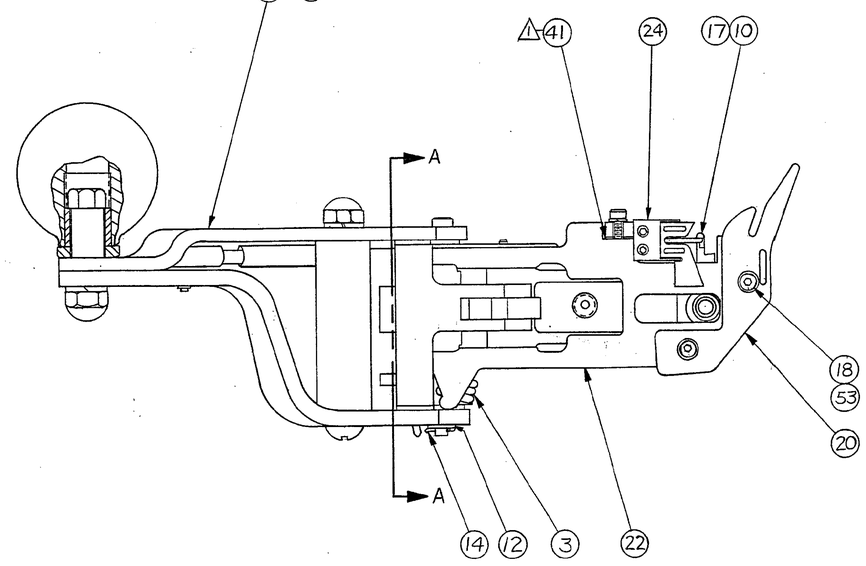

1. THICKNESS OF SHIM TO BE DETERMINED AT ASSEMBLY. SEE DRAWING 294059 FOR SHIM SIZE AND PART NUMBER. ONLY ONE SHIM TO BE USED PER SIDE.
2. WHEN APPLICATOR ONLY IS SHIPPED, IT MUST BE PACKED WITH CRIMP HEIGHT GAGE ASSEMBLY AND INSTRUCTION SHEET (SEE DRAWING NO. 248010, KIT ASSEMBLY AND 230057 CASE ASSEMBLY.)
3. USE .0960 DIAMETER GAGE PIN AS NO-GO TO CHECK PROPER CRIMPER SPACING.
4. VERNIER INDEX SHAFT TO WITHSTAND 125 INCH LBS. TORQUE WITHOUT TURNING.
5. SET CRIMP HEIGHT PER ENGINEERING SPECIFICATION 115-6021.
6. APPLY LOCKTITE 79-31, TYPE EV, TO THREADS AT ASSEMBLY.

-3	-2	-1	DWG SIZE	PART NO	DESCRIPTION	ITEM NO
1		–	B	230040-1	COLOR CODE LABEL (MINI)	64
–		1	B	230039-1	COLOR CODE LABEL (STD)	63
1		–	C	247336-2	HANDLE ASSY.	62
1		–	C	225045-4	CRIMPER-OUTSIDE RIGHT	61
1		–	D	225048-4	CRIMPER-INSIDE RIGHT	60
1		–	C	225046-4	CRIMPER-OUTSIDE LEFT	59
1		–	D	225047-4	CRIMPER-INSIDE LEFT	58
2		–	B	225809-1	SUPPORT WIRE	57
1		–	B	651399-7	INDENTIFICATION PLATE	56
1		–	C	247333-4	ANVIL	55
1		1	A	1-21000-2	SCREW, SOC. HD. CAP 2-56×.50	54
4		4	A	21108-5	WASHER, FLAT #6	53
1		1	A	23564-7	WASHER, SPRING LOCK 5/16 LIGHT	52
9		5	A	21057-1	WASHER, SPRING LOCK (NO.2)	51
4		4	A	1-22245-2	SCREW, SOC HD CAP 2-56×.50	50
4		–	A	1-21000-1	SCREW, SOC HD. CAP 2-56×.38	49
4		4	A	225051-1	SPACER, WIRE, SUPPORT	48
–		1	B	248706-2	SUPPORT, WIRE, LEFT	47
–		1	B	248706-1	SUPPORT, WIRE, RIGHT	46
						45
						44
–		1	D	231809-1	LEFT CRIMPER	43
–		1	D	231808-1	RIGHT CRIMPER	42
AR		AR	B	249055	SHIM, CRIMPER (AS REQ'D.)	41
1		1	A	1-22572-9	SCREW SOC SET 6-32×.12	40
1		1	A	249185	SPACER, CRIMPER (AS REQ'D.)	39
1		1	A	23030-9	SCR, SOC. HD. SELF LOCK 8-32×.38	38
1		1	A	225163-1	LOCK SCREW (SPEC. 10-32)	37
–		–	B	651399-6	INDENTIFICATION PLATE	36
1		1	B	247313-1	SHAFT, VERNIER INDEX	35
1		1	A	225164-1	WASHER, FLAT, SPECIAL	34
1		1	B	244248-4	PIN, RETAINING	33
1		1	A	21116-7	RING, EXT. RET.	32
1		1	B	244248-5	PIN, RETAINING	31
1		1	A	1-21117-0	RING, EXT. RET.	30
1		1	A	225264-1	PIN, ANVIL SLIDE	29
2		2	A	247305-1	ANVIL ROLLER	28
1		1	A	1-21112-3	RING, EXT. RET.	27
1		1	B	244248-6	PIN, RETAINING	26
2		2	A	21074-2	WASHER, SPRING LOCK #4	25
2		2	A	225053-1	BRACKET, WIRE SUPPORT	24
1		1	A	22594-3	NUT, HEX 5/16-18	23
1		1	D	247334-1	BODY	22
1		1	A	2-23841-7	SCREW, SOC. SET OVAL PT 5/16-18×1.00	21
2		2	B	249856-1	HOLDBACK, WIRE	20
1		1	B	1-244248-0	PIN, RETAINING	19
4		4	A	21185-1	SCREW, SHCD (4-40)	18
1		1	A	3-21118-8	PIN, SLOTTED SPRING (3/32 × 5/8)	17
–		1	B	651399-1	PLATE, INDENTIFICATION	16
2		2	A	3-23513-2	SCREW, BUT. HD. CAP 4-40×.18LG	15
1		1	A	1-22846-8	PIN, COTTER	14
1		1	A	247307-1	PIN, HANDLE PIVOT	13
1		1	A	21108-8	WASHER, FLAT 1/4	12
1		1	B	245543-1	RATCHET HOUSING ASSY.	11
1		1	B	651465-1	CUTTER, WIRE	10
1		1	A	22173-1	RING, EXT. RET.	9
–		1	C	247336-1	HANDLE ASSY.	8
1		1	B	247308-1	LEVER	7
1		1	B	247327-1	LINK-MACHINED	6
4		4	A	1-21000-9	SCREW, SOC. HD. CAP (6-32×.38)	5
4		4	A	21057-3	WASHER, SPRING LOCK #6	4
1		1	B	250002-1	SPRING, TORSION	3
–		1	C	247333-1	ANVIL	2
						1

SUPERSEDED BY -1

247329-3	MA-6M APPLICATOR
247329-1	MA-6B APPLICATOR
PART NO.	ASSEMBLY DESCRIPTION

P	F	LTR	REVISION RECORD	APP	DATE
		BC	ECN 0150-0941-00	GDH	7-00
		BB	REV: ECN 0150-0873-00	MW	4-00
		BA1	REV: ECN CN-7108	KS	11-24-86
		BA	REV: ECN CN-505	BL	12/8/85
		AZ	REDWN W/CHG'S ECN CN-[illegible]	BL	8/8/85

P	F	LTR	REVISION RECORD	APP	DATE

DIMENSIONS IN INCHES.
TOLERANCES UNLESS OTHERWISE SPECIFIED:
2 PL DEC ±
3 PL DEC ±
4 PL DEC ±
ANGLES ±
SURF TEXTURE: √
REMOVE BURRS, BREAK SHARP EDGES .015R MAX

QTY REQD PER ASSY — PARTS LIST

MATERIAL | HEAT TREAT | FINISH

DR Barry Lewis 8-8-85 APP H. Smith 8/27/85
CHK Jim Sullivan 8-27-85 REL C. Ceck 8/30/85

AMP — AMP INCORPORATED Harrisburg, Pa.

NAME APPLICATOR ASSEMBLY (MA-6B & MA-6M)

SCALE 1/1 | D | DWG NO 247329 | SHEET 1 OF 1 | REV BC

LOC A | DIST 40

AMP 3308 REV 6-78)

THIS INFORMATION IS CONFIDENTIAL AND IS DISCLOSED TO YOU ON CONDITION THAT IT WILL BE USED ONLY FOR THE PURPOSE FOR WHICH IT IS DISCLOSED AND NOT REPRODUCED OR DISCLOSED TO OTHER PERSONNEL WITHOUT WRITTEN AUTHORIZATION FROM AMP INCORPORATED, HARRISBURG, PA.

Downloaded From Oneyac.com

单击下面可查看定价，库存，交付和生命周期等信息

>>TE Connectivity(泰科)

Downloaded From Oneyac.com