THIS DRAWING IS UNPUBLISHED. RELEASED FOR PUBLICATION -,- .
© COPYRIGHT - By - ALL RIGHTS RESERVED.

REVISIONS

P	LTR	DESCRIPTION	DATE	DWN	APVD
	B1	REVISED PER ECO-16-004800	12SEP2016	NK	MZ

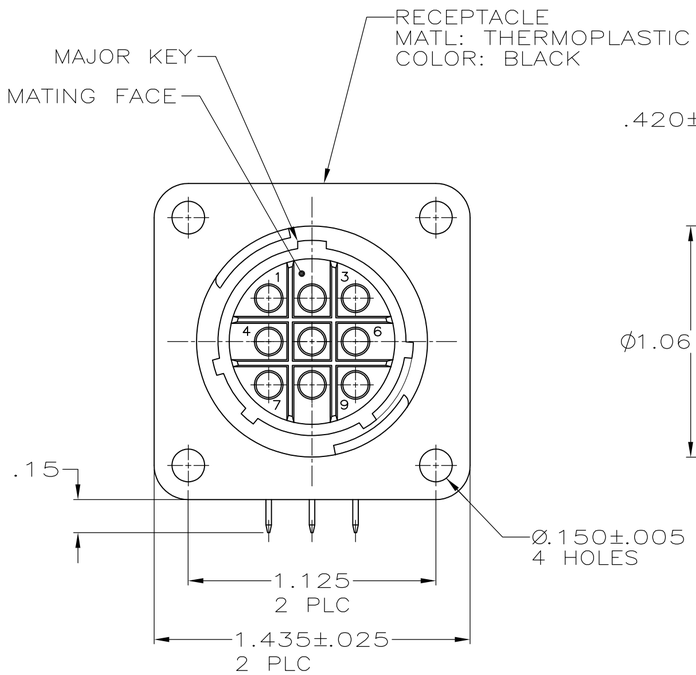

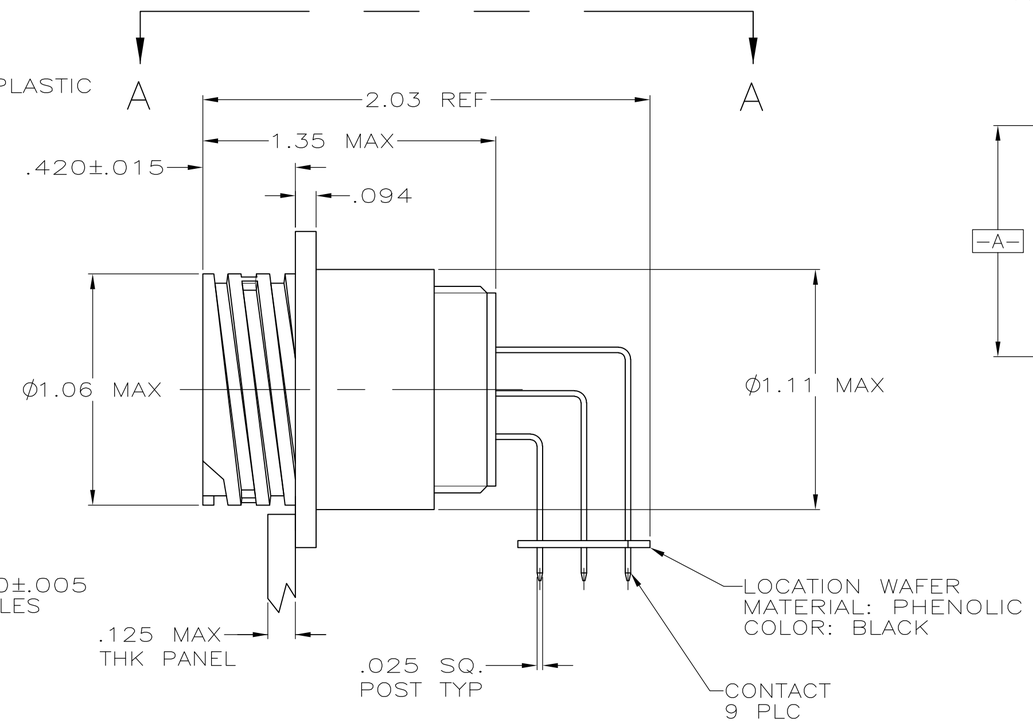

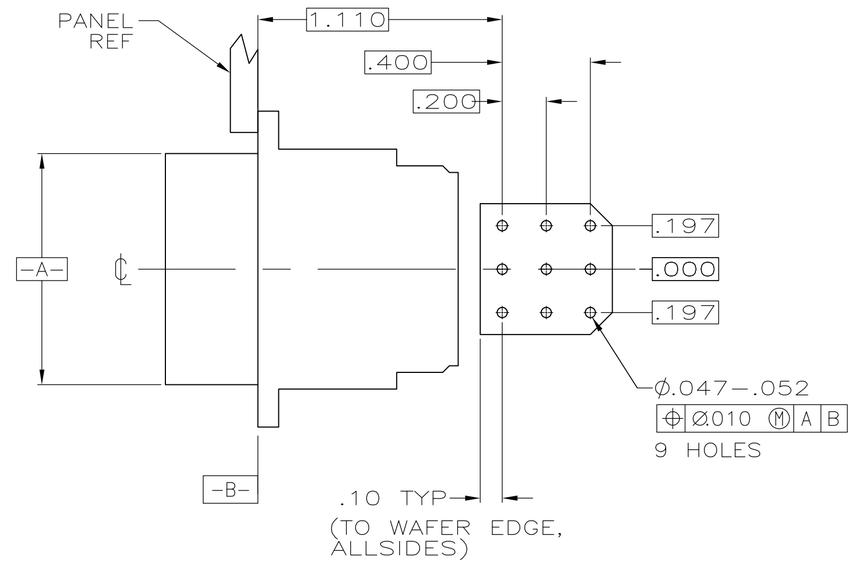

VIEW A-A △4

RECOMMENDED PC BOARD LAYOUT

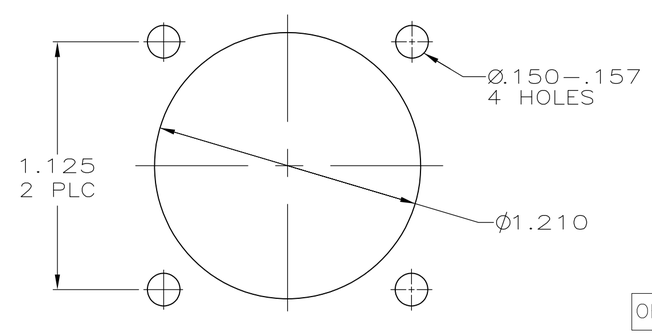

RECOMMENDED
PANEL CUTOUT

1 CONTACT CAVITIES IDENTIFIED BY CHARACTERS ON FRONT AND REAR FACES OF CONNECTOR.

2 #6 FASTENER RECOMMENDED FOR MOUNTING.

△3 CONTACT BODY: .000030 MIN GOLD FOR A LENGTH OF .250 MIN FROM MATING END, WITH REMAINDER TO BE GOLD FLASH, BOTH OVER .000050 MIN NICKEL.
CONTACT POST: .000100 MIN TIN-LEAD OVER .000100 MIN COPPER.

△4 PC BOARD HOLE PATTERN IS DEFINED RELATIVE TO CONNECTOR C.L. AND PANEL MOUNTING FACE INDICATED.

△5 CONTACT BODY: .000030 MIN GOLD FOR A LENGTH OF .250 MIN FROM MATING END, WITH REMAINDER TO BE GOLD FLASH, BOTH OVER .000050 MIN NICKEL.
CONTACT POST: .000100 MIN TIN OVER .000100 MIN COPPER.

OBSOLETE	△5	~~1-796497-1~~
	△3	796497-1
	CONTACT FINISH	PART NUMBER

THIS DRAWING IS A CONTROLLED DOCUMENT.

DIMENSIONS: INCHES

TOLERANCES UNLESS OTHERWISE SPECIFIED:
0 PLC ± -
1 PLC ± -
2 PLC ± .03
3 PLC ± .010
4 PLC ± -
ANGLES ± -

MATERIAL -
FINISH -

DWN HAMNER 4-13-00
CHK M.CHACKO 4-18-00
APVD M.CHACKO 4-18-00
PRODUCT SPEC —
APPLICATION SPEC —
WEIGHT

TE Connectivity

NAME RECEPTACLE ASSY, POSTED, RT ANGLE, STD SEX, SIZE 17-9, SERIES 1, CPC

SIZE	CAGE CODE	DRAWING NO	RESTRICTED TO
A2	00779	C-796497	—

CUSTOMER DRAWING | SCALE 2:1 | SHEET 1 OF 1 | REV B1

796497

1471-9 (1/15)

Downloaded From Oneyac.com

单击下面可查看定价，库存，交付和生命周期等信息

>>TE Connectivity(泰科)

Downloaded From Oneyac.com