THIS DRAWING IS UNPUBLISHED. RELEASED FOR PUBLICATION -,- .
© COPYRIGHT - BY TYCO ELECTRONICS CORPORATION. ALL RIGHTS RESERVED.

LOC	DIST
DF	AO

REVISIONS

P	LTR	DESCRIPTION	DATE	DWN	APVD
	G	REV PER ECO 06-126817	7-25-06	CT	DE

1. MAT'L: LEADED COPPER PER ASTM-B-152.
2. FINISH: GOLD .000050-.000080 THK PER ASTM-B-488 OVER NICKEL .000050-.000200 THK PER AMS-QQ-N-290.

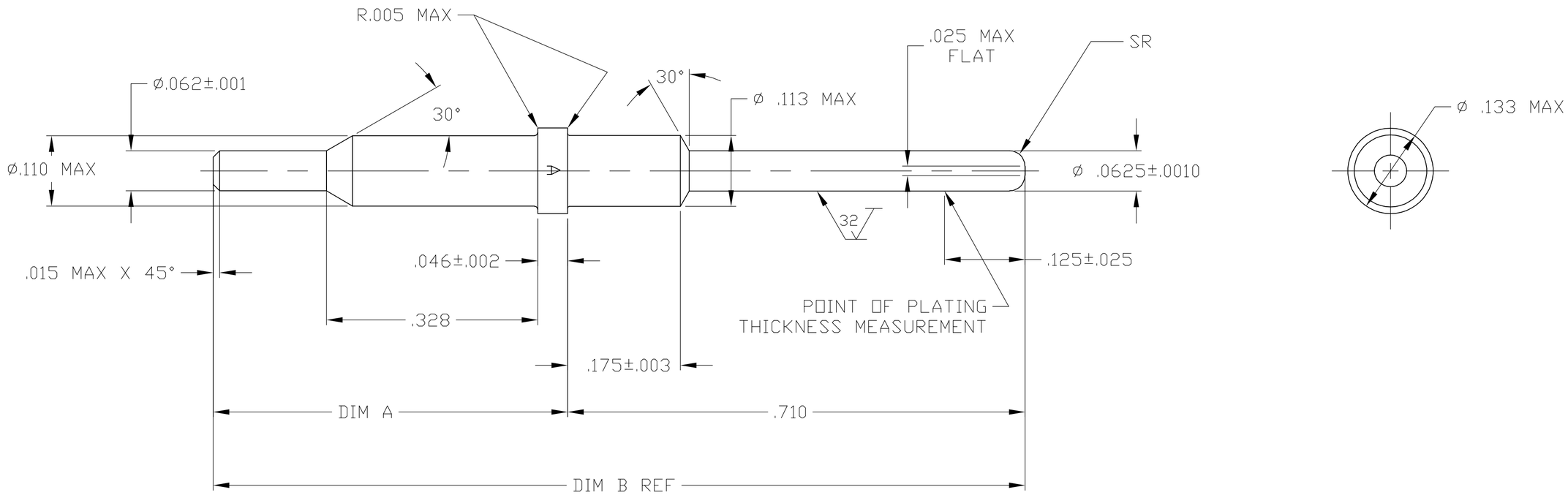

DIM B	DIM A	FINISH	MATERIAL	PART NO
1.460 REF	.750	2	1	205548-4
1.259 REF	.550	2	1	205548-2

THIS DRAWING IS A CONTROLLED DOCUMENT.

DIMENSIONS: INCHES

TOLERANCES UNLESS OTHERWISE SPECIFIED:
0 PLC ± -
1 PLC ± -
2 PLC ± -
3 PLC ± .005
4 PLC ± .0005
ANGLES ± 5°

MATERIAL: SEE TABLE

FINISH: SEE TABLE

DWN C.C.THOMAS 2-25-05
CHK D.EABY 2-28-05
APVD D.EABY 2-28-05
PRODUCT SPEC —
APPLICATION SPEC —
WEIGHT —

Tyco Electronics Corporation
Harrisburg, Pa 17105-3608

NAME: PIN,SIZE 16,ARINC 404, (SPECIAL)

SIZE	CAGE CODE	DRAWING NO	RESTRICTED TO
A2	00779	C-205548	—

CUSTOMER DRAWING | SCALE 8:1 | SHEET 1 OF 1 | REV G

205548

AMP 1471-9 REV 31MAR2000

Downloaded From Oneyac.com

25JUL2006 7:28am us016412 H:\docmod\205548_1_c.dwg

单击下面可查看定价，库存，交付和生命周期等信息

>>TE Connectivity(泰科)

Downloaded From Oneyac.com