THIS DRAWING IS UNPUBLISHED. RELEASED FOR PUBLICATION - ,- .
© COPYRIGHT - By - ALL RIGHTS RESERVED.

LOC	DIST
AD	00

REVISIONS

P	LTR	DESCRIPTION	DATE	DWN	APVD
	L2	REVISED PER ECO-11-004917	11MAR11	RK	HMR

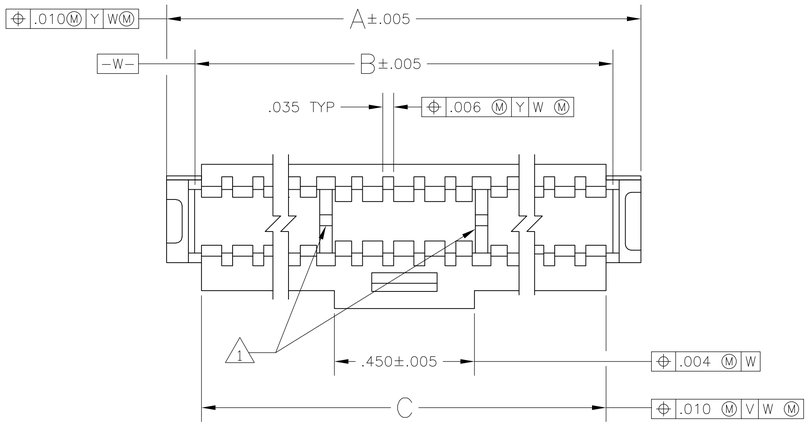

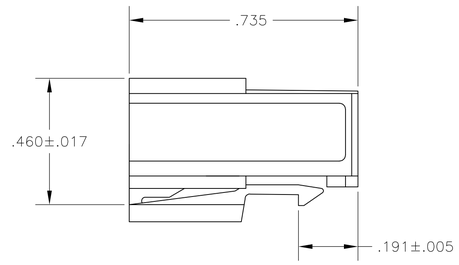

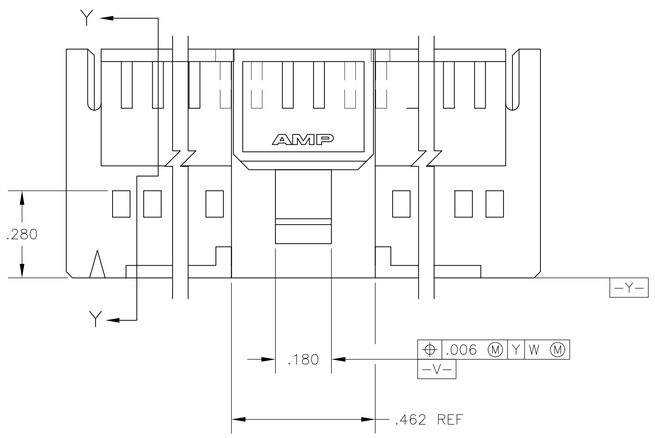

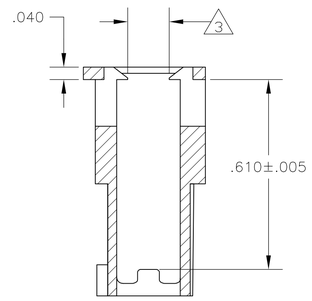

SECTION Y-Y

1 SEE TABLE FOR RIB QTY

2. THIS COUPLING SHROUD IS TO BE USED WITH AMPMODU® MTE RECEPTACLE ASSEMBLIES WITH GUIDE RIBS THE NUMBER OF POSITIONS LISTED EQUALS THE TOTAL NUMBER OF POSITIONS WHICH CAN BE CONTAINED WITHIN THE COUPLING SHROUD

3 .133 BETWEEN RIBS REFERENCED BY NOTE 1 ONLY. .153 ON ENDS (AREAS OUTSIDE OF THE RIBS).

4 OBSOLETE PARTS: OBSOLETE CIS STREAMLINING PER D.RENAUD/D.SINISI

	C	B	A	NO OF RIBS	NO OF POSN	PART NUMBER
	2.460	2.505	2.685	2	50	1-104500-1
	1.960	2.005	2.085	2	40	1-104500-0
4 OBSOLETE	1.660	1.705	1.885	2	34	~~104500-9~~
	1.560	1.605	1.785	2	32	104500-8
	1.460	1.505	1.685	2	30	~~104500-7~~
OBSOLETE 4	1.360	1.405	1.585	2	28	~~104500-6~~
	1.260	1.305	1.485	2	26	~~104500-5~~
	1.160	1.205	1.385	2	24	104500-4
	1.060	1.105	1.285	2	22	104500-3
	.960	1.005	1.185	2	20	104500-2
4 OBSOLETE	.860	.905	1.085	2	18	~~104500-1~~

THIS DRAWING IS A CONTROLLED DOCUMENT.

DIMENSIONS: INCHES

TOLERANCES UNLESS OTHERWISE SPECIFIED:
0 PLC ± -
1 PLC ± -
2 PLC ± -
3 PLC ± .010
4 PLC ± -
ANGLES ± -

MATERIAL: FLAME RETARDANT THERMOPLASTIC COLOR-BLACK

FINISH: -

DWN D KEITZER 01DEC88
CHK S.SHUEY 07DEC88
APVD C.SINISI 14DEC88

PRODUCT SPEC 108-25034
APPLICATION SPEC 114-25026
WEIGHT -

TE Connectivity

NAME: COUPLING SHROUD, AMPMODU® MTE, DOUBLE ROW, .100X.100 CL

SIZE	CAGE CODE	DRAWING NO	RESTRICTED TO
A1	00779	C-104500	-

CUSTOMER DRAWING | SCALE 4:1 | SHEET 1 OF 1 | REV L2

4805 (3/11)

Downloaded From Oneyac.com

单击下面可查看定价，库存，交付和生命周期等信息

>>TE Connectivity(泰科)

Downloaded From Oneyac.com