THIS DRAWING IS UNPUBLISHED. RELEASED FOR PUBLICATION -,- .
© COPYRIGHT - BY TYCO ELECTRONICS CORPORATION. ALL RIGHTS RESERVED.

LOC	DIST
AD	00

REVISIONS

P	LTR	DESCRIPTION	DATE	DWN	APVD
	P	EC 0G3C 0766 04	27DEC04	BSV	JLG
	P1	REVISED PER ECO-09-020932	26AUG09	KK	AEG

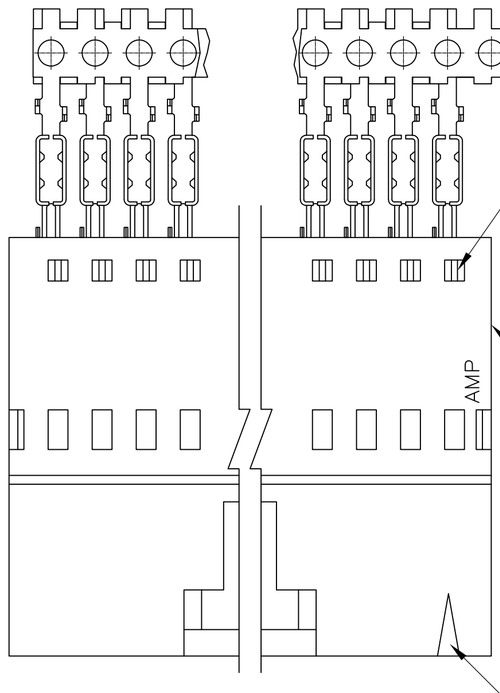

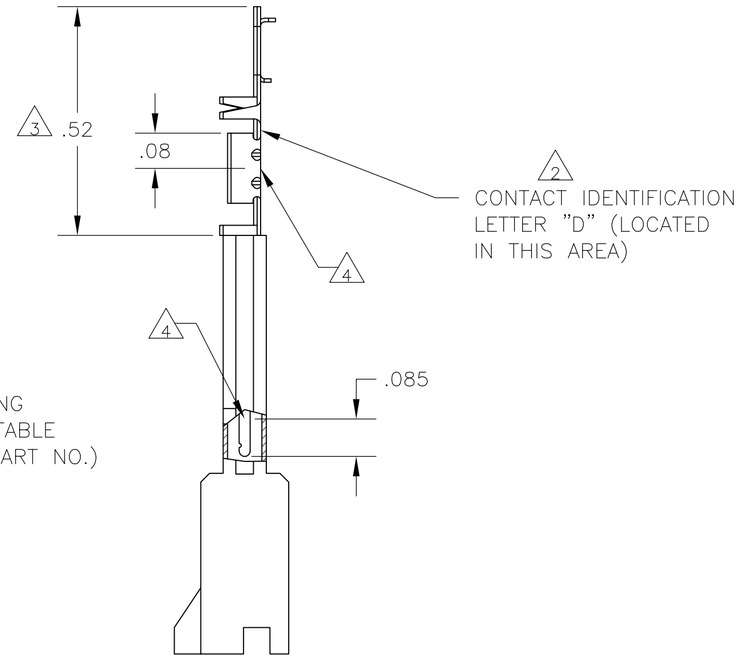

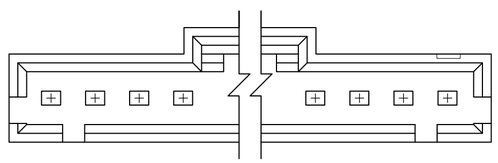

9 OBSOLETE	8	2-103653-4	25	7-103660-4
	8	2-103653-3	24	7-103660-3
	8	2-103653-2	23	7-103660-2
	8	2-103653-1	22	7-103660-1
	8	2-103653-0	21	7-103660-0
	8	1-103653-9	20	6-103660-9
9 OBSOLETE	8	1-103653-8	19	6-103660-8
	8	1-103653-7	18	6-103660-7
	8	1-103653-6	17	6-103660-6
	8	1-103653-5	16	6-103660-5
9 OBSOLETE	8	1-103653-4	15	6-103660-4
	8	1-103653-3	14	6-103660-3
	8	1-103653-2	13	6-103660-2
9 OBSOLETE	7	2-103653-4	25	2-103660-4
	7	2-103653-3	24	2-103660-3
9 OBSOLETE	7	2-103653-2	23	2-103660-2
	7	2-103653-1	22	2-103660-1
	7	2-103653-0	21	2-103660-0
	7	1-103653-9	20	1-103660-9
9 OBSOLETE	7	1-103653-8	19	1-103660-8
	7	1-103653-7	18	1-103660-7
	7	1-103653-6	17	1-103660-6
9 SUPERSEDED	7	1-103653-5	16	1-103660-5
	7	1-103653-4	15	1-103660-4
	7	1-103653-3	14	1-103660-3
9 SUPERSEDED	7	1-103653-2	13	1-103660-2
SUPERSEDED BY 1-103945-1		1-103653-1	12	1-103660-1
SUPERSEDED BY 1-103945-0		1-103653-0	11	1-103660-0
SUPERSEDED BY 103945-9		103653-9	10	103660-9
SUPERSEDED BY 103945-8		103653-8	9	103660-8
SUPERSEDED BY 103945-7		103653-7	8	103660-7
SUPERSEDED BY 103945-6		103653-6	7	103660-6
SUPERSEDED BY 103945-5		103653-5	6	103660-5
SUPERSEDED BY 103945-4		103653-4	5	103660-4
SUPERSEDED BY 103945-3		103653-3	4	103660-3
SUPERSEDED BY 103945-2		103653-2	3	103660-2
SUPERSEDED BY 103945-1		103653-1	2	103660-1
	PLATING	HOUSING PART NUMBER	NO OF POSN	ASSEMBLY PART NUMBER

103660

1. CONTACTS ARE LATCHED INTO THE PRELOAD WINDOWS
2. USE WITH #22-#26 AWG WIRE SIZE, .054/.030 INSULATION DIAMETER, .015 MAXIMUM INSULATION THICKNESS
3. THE DIMENSION APPLIES WITH THE FORWARD PRELOAD STOP IN CONTACT WITH THE HOUSING SURFACE
4. POINT OF MEASUREMENT FOR PLATING THICKNESS
5. FOR STRIP ASSEMBLIES SEE PART NUMBER 103945
6. MATERIAL- HOUSING: FLAME RETARDANT THERMOPLASTIC, COLOR: BLACK PINS: PHOS. BRONZE
7. FINISH- PINS: .000015 GOLD IN THE CONTACT AREA, .000050-.000100 BRIGHT TIN-LEAD ON THE TERMINATION AREA, OVER .000050 NICKEL.
8. FINISH- PINS: .000015 GOLD IN THE CONTACT AREA, .000050-.000100 MATTE TIN ON THE TERMINATION AREA, OVER .000050 NICKEL.
9. OBSOLETE PARTS: OBSOLETE CIS STREAMLINING PER D.RENAUD/D.SINISI

THIS DRAWING IS A CONTROLLED DOCUMENT.

DIMENSIONS: INCHES

TOLERANCES UNLESS OTHERWISE SPECIFIED:
0 PLC ± -
1 PLC ± -
2 PLC ± -
3 PLC ± -
4 PLC ± -
ANGLES ± -

MATERIAL 6

FINISH SEE TABLE

DWN R.BROWN 26JUL00
CHK K.WRIGHT 26JUL00
APVD K.WRIGHT 26JUL00
PRODUCT SPEC 108-25034
APPLICATION SPEC 114-25026
WEIGHT -

Tyco Electronics
Tyco Electronics Corporation
Harrisburg, Pa 17105-3608

NAME
SHROUDED PIN ASSY, AMPMODU MTE, SINGLE ROW, .100 CL, POLARIZED, WITH LATCH WINDOWS, FOR #22-#26 AWG WIRE SIZE

SIZE A2 | CAGE CODE 00779 | DRAWING NO C-103660 | RESTRICTED TO -

CUSTOMER DRAWING | SCALE 4:1 | SHEET 1 OF 1 | REV P1

Downloaded From Oneyac.com

单击下面可查看定价，库存，交付和生命周期等信息

>>TE Connectivity(泰科)

Downloaded From Oneyac.com