THIS DRAWING IS UNPUBLISHED. RELEASED FOR PUBLICATION -.- .
© COPYRIGHT - BY TYCO ELECTRONICS CORPORATION. ALL RIGHTS RESERVED.

LOC	DIST
AD	00

REVISIONS

P	LTR	DESCRIPTION	DATE	DWN	APVD
	O	REV PER EC 0S12-0304-04	14JUN04	NK	RP

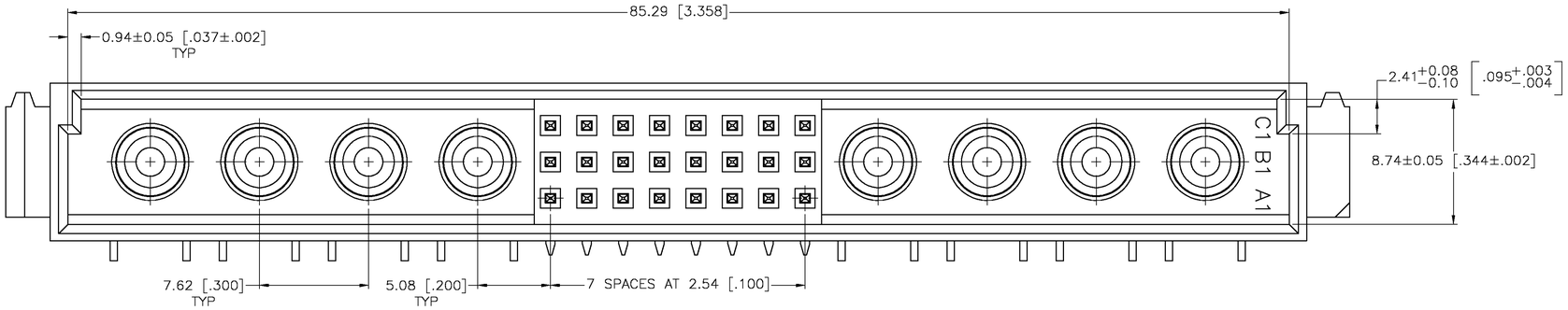

1. HOUSING: GLASS-FILLED POLYESTER, GRAY.
   SIGNAL CONTACT: BRASS.
   POWER CONTACT: COPPER ALLOY.
2. SIGNAL CONTACT: DIN 41612 CLASS 1 IN CONTACT AREA, TIN-LEAD PLATE ON POSTS.
   POWER CONTACT: DIN 41612 CLASS 1 IN MATING AREA.
3. PART NUMBER AND DATE CODE MARKED IN THIS APPROXIMATE AREA.
4. RECOMMENDED HOLE SIZE FOR MANUAL APPLICATION OF CONNECTOR ONTO PC BOARD.
5. MARKING ON THIS SIDE.

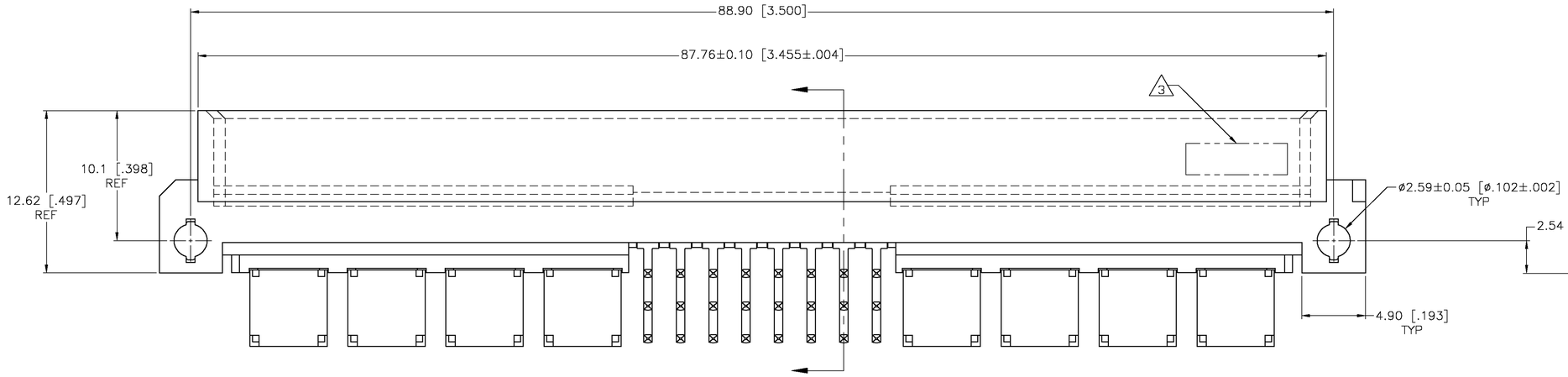

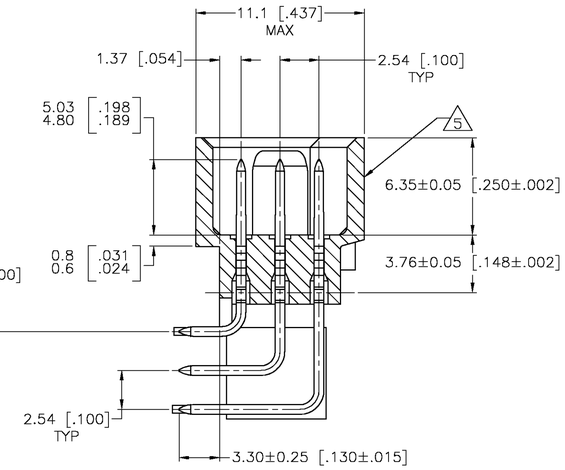

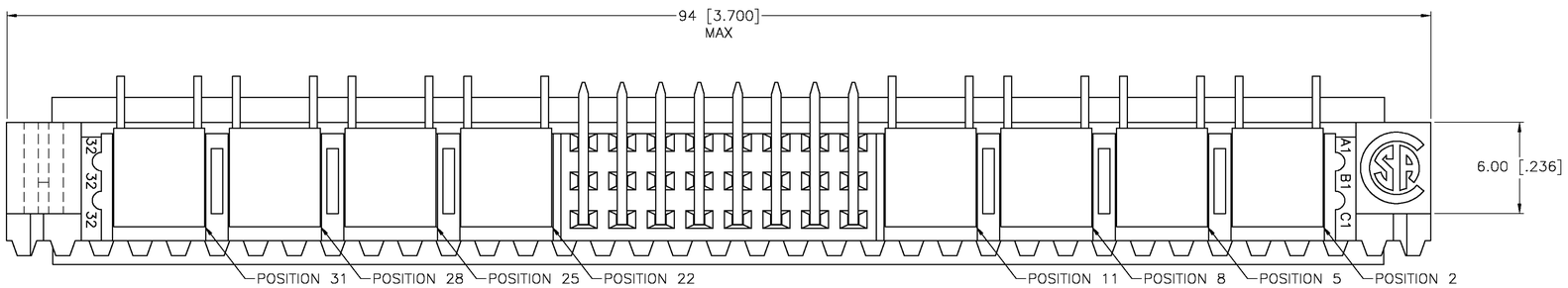

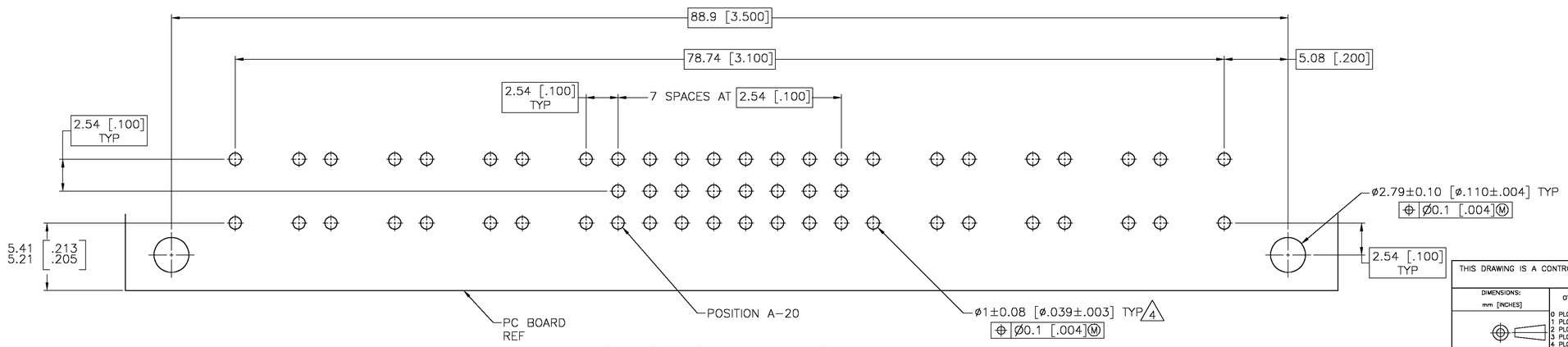

PC BOARD LAYOUT

148689-1
PART NUMBER

THIS DRAWING IS A CONTROLLED DOCUMENT.

DIMENSIONS: mm [INCHES]

TOLERANCES UNLESS OTHERWISE SPECIFIED:
0 PLC ± –
1 PLC ± –
2 PLC ± 0.13 [.005]
3 PLC ± –
4 PLC ± –
ANGLES ± –

MATERIAL 1
FINISH 2

DWN B.CARBO 16MAR04
CHK A.SHARPE 16MAR04
APVD A.SHARPE 16MAR04
PRODUCT SPEC —
APPLICATION SPEC —
WEIGHT —

tyco Electronics
Tyco Electronics Corporation
Harrisburg, Pa 17105-3608

NAME
PIN ASSEMBLY, EUROCARD, TYPE M, 24 + 8 POSITION

SIZE	CAGE CODE	DRAWING NO	RESTRICTED TO
A1	00779	C-148689	—

CUSTOMER DRAWING
SCALE 5:1 SHEET 1 OF 1 REV O

AMP 4805 REV 31MAR2000

Downloaded From Oneyac.com

单击下面可查看定价，库存，交付和生命周期等信息

>>TE Connectivity(泰科)

Downloaded From Oneyac.com