DRAWING MADE IN THIRD ANGLE PROJECTION

© COPYRIGHT 1975-83 BY AMP INCORPORATED, HARRISBURG, PA. ALL INTERNATIONAL RIGHTS RESERVED. AMP INCORPORATED PRODUCTS COVERED BY U. S. AND FOREIGN PATENTS AND/OR PATENTS PENDING.

LOC	DIST
AD	39

REVISIONS

P	F	ZONE	LTR	DESCRIPTION	DATE	APPROVED
✓			G	REV PER AD-5084	2-1-91	RF
✓	✓		H	REV PER AD-5161	2-1-91	RF
✓			J	REV PER 0010-0981-93 RAC	9-93	JA
✓			K	REV PER 0310-0146-96 CB	2-27-97	SAS
✓			L	REV PER 0310-0437-97 CB	12-3-97	SAS
			L1	REVISED PER ECO-10-000445	JAN10	HMR

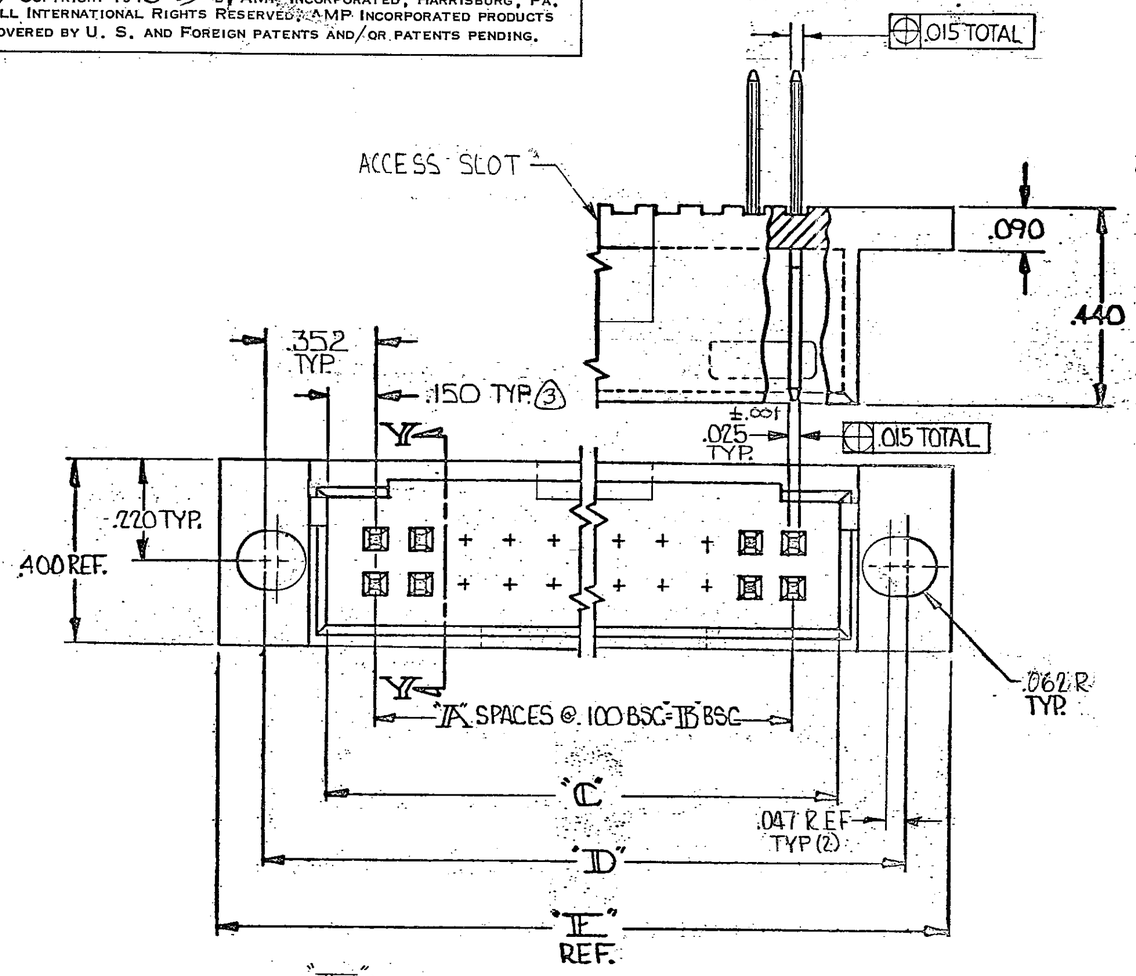

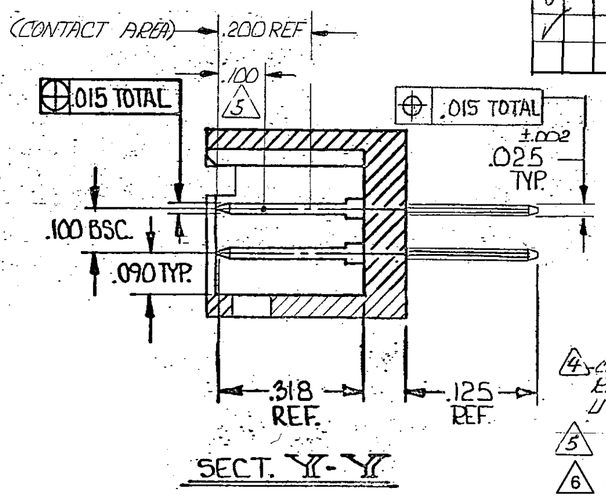

△1 .000030 GOLD ON CONTACT AREA, GOLD FLASH ON SOLDER AREA ALL OVER .000050 MIN. NICKEL ON ENTIRE POST.

(3) WILL ALSO MATE WITH OTHER CONNECTORS WHICH ARE COMPATIBLE WITH THE .150 END DIM AND WILL MATE W/MOD IV HAVING FOUR EXTRA EMPTY CIRCUITS (TWO EA. END) --- EX: 20 POS. POST HEADER WILL MATE WITH 24 POS. MOD IV HOUSING.

(4) CUSTOMER P.C. BRD. LAYOUT MAY VARY WITHIN THIS RANGE. WHEN MATING WITH MOD IV CONNECTORS UTILIZING JACKSCREW HARDWARE USE D-.094" AND .345 TYP.

△5 POINT OF MEASUREMENT FOR PLATING THICKNESS.

△6 OBSOLETE PARTS: OBSOLETE CIS STREAMLINING PER D.RENAUD/D.SINISI

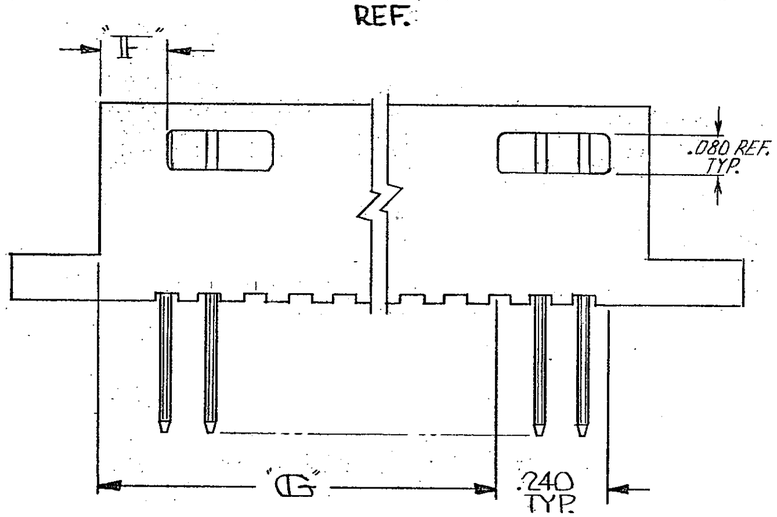

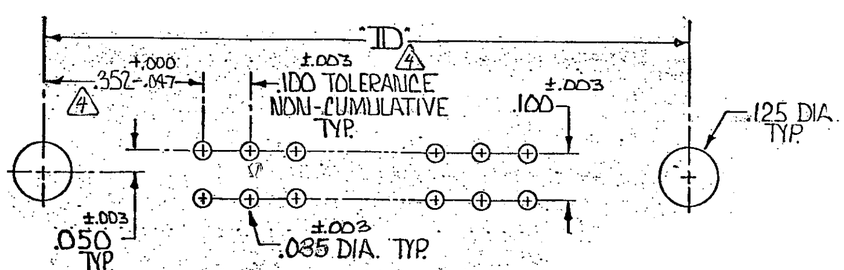

RECOMMENDED HOLE LAYOUT

	"G"	"F"	"E"	"D"	"C"	"B"	"A"	FINISH	NO. OF POS.	PART NO
	2.890	.190	3.804	3.604	3.100	2.900	29	(1)	60	87474-6
	2.790		3.704	3.504	3.100	2.800	28		58	-5
	2.690		3.604	3.404	3.000	2.700	27		56	-4
	2.590		3.504	3.304	2.900	2.600	26		54	-3
	2.490		3.404	3.204	2.800	2.500	25		52	-2
	2.290		3.204	3.004	2.600	2.300	23		48	-1
OBSOLETE	2.190		3.104	2.904	2.500	2.200	22		46	-0
	2.090		3.004	2.804	2.400	2.100	21		44	-9
	1.990		2.904	2.704	2.300	2.000	20		42	-8
	1.690		2.604	2.404	2.000	1.700	17		36	-7
	1.490		2.404	2.204	1.800	1.500	15		32	-6
	1.390		2.304	2.104	1.700	1.400	14		30	-5
	1.290		2.204	2.004	1.600	1.300	13		28	-4
(6) OBSOLETE	1.090		2.004	1.804	1.400	1.100	11		24	-3
OBSOLETE	.990	.190	1.904	1.704	1.300	1.000	10		22	-2
OBSOLETE	—	.490	1.704	1.504	1.100	.800	8		18	-1
OBSOLETE	—	.390	1.604	1.404	1.000	.700	7		16	-0
(6) OBSOLETE	—	.390	1.504	1.304	.900	.600	6		14	-9
OBSOLETE	—	.290	1.404	1.204	.800	.500	5		12	-8
	2.390	.190	3.304	3.104	2.700	2.400	24	(1)	50	87474-7
	1.890	.190	2.804	2.604	2.200	1.900	19		40	-6
OBSOLETE	1.790	.190	2.704	2.504	2.100	1.800	18		38	-5
	1.590	.190	2.504	2.304	1.900	1.600	16		34	-4
(6) OBSOLETE	1.190	.190	2.104	1.904	1.500	1.200	12		26	-3
	.890	.190	1.804	1.604	1.200	.900	9		20	-2
	—	.290	1.304	1.104	.700	.400	4	(1)	10	87474-1

CUST. 87474

UNLESS OTHERWISE SPECIFIED DIMENSIONS ARE IN INCHES.
TOLERANCES ON:
DECIMALS ±.005
ANGLES ± —

MATERIAL
HSG. = GLASS FILLED NYLON COLOR- BLACK
POST = PHOS. BRONZE

FINISH
SEE TABLE

CONTRACT NO

DR B.A. Wolfe 10-13-75
CHK D.M. Pitts 10-14-75
APPD B. Bennett 10-14-75
APPD C. Lozinski 10/14/75
DSGN APPD
OTHER APPD

AMP INCORPORATED Harrisburg, Pa.

NAME
HEADER ASSY., MOD II, .025 SQ. POST, DBL. ROW, .100 × .100 CENTERS, W/ MTG. EARS & DETENT SLOTS (MATES W/ AMP LATCH OR FFC) (2)

SIZE	CODE IDENT NO	DRAWING NO
C	00779	87474

SCALE | SHEET

AMP 1471-6 (7-73)

Downloaded From Oneyac.com

CUSTOMER DRAWING

单击下面可查看定价，库存，交付和生命周期等信息

>>TE Connectivity(泰科)

Downloaded From Oneyac.com