THIS DRAWING IS UNPUBLISHED. RELEASED FOR PUBLICATION ,19 .
DIFFUSION RESERVE AMP
© COPYRIGHT BY TYCO ELECTRONICS CORPORATION ALL RIGHTS RESERVED. TOUS DROITS RESERVES.

LOC	DIST
F	00

REVISIONS

P	LTR REV	DESCRIPTION MODIFICATIONS	DATE	DWN DESS.	APVD APP.
	D	CHARNIERE MODIFIEE	05-MAR-03	RP	JPP
	E	CHARNIERE MODIFIEE	10-OCT-03	RP	JPP
	F	20.2 P.I. ETAIT 20.2+/-0.2	13-JAN-04	RP	JPP

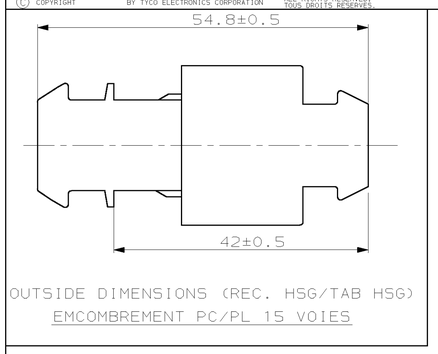

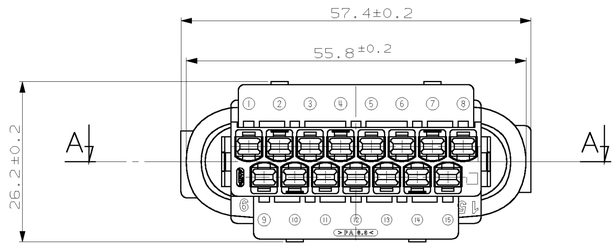

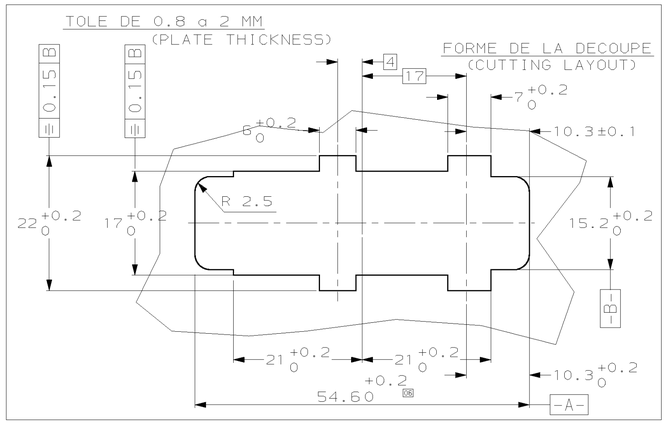

SECTION AA

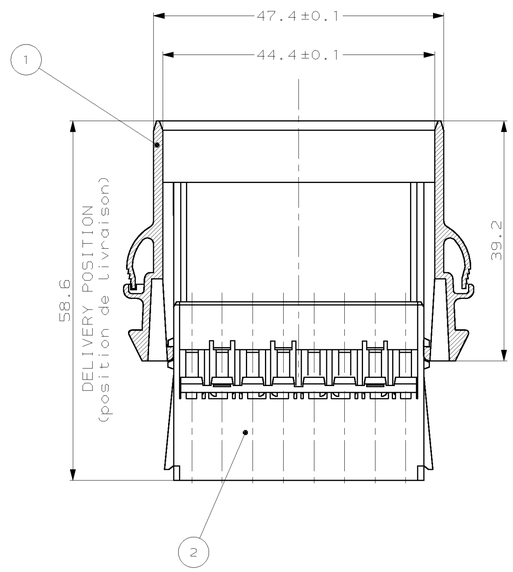

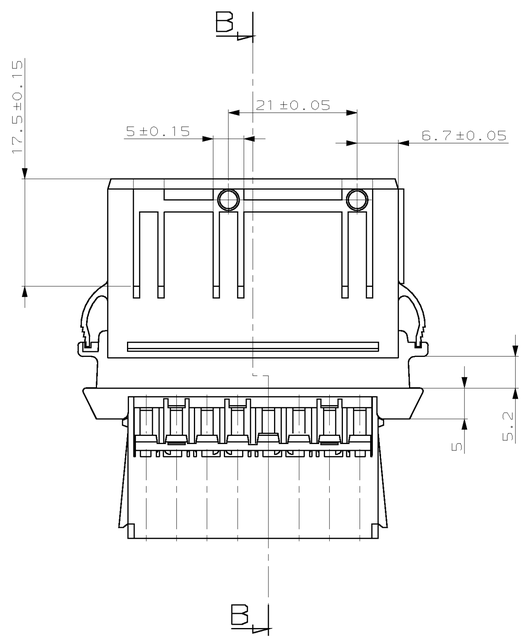

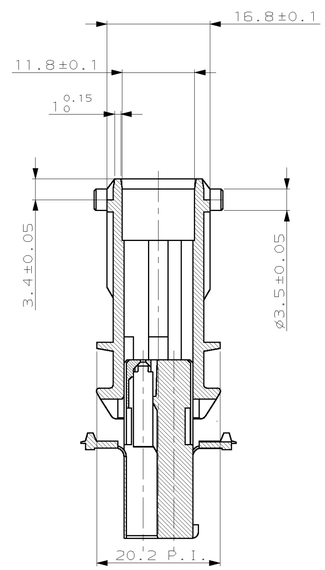

SECTIONBB

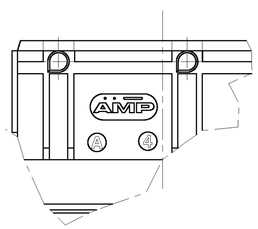

VUE DE DETAIL

NOTES:

P.I.: POUR INFORMATION

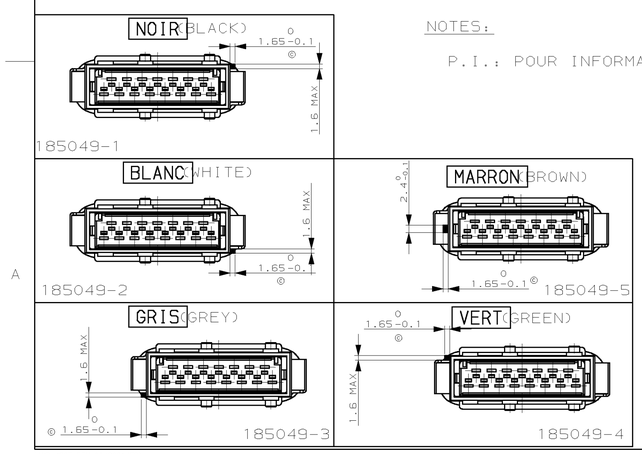

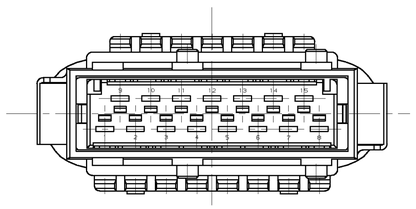

Rep	Qte		
2	1	MODULE	Polyamide 6/6
1	1	MODULE HOLDER (porte module)	PBT (REINFORCED GLASS FIBER) charge de fibre de verre
Rep	Qte	DESIGNATION	MATERIAL (matiere)

THIS DRAWING IS A CONTROLLED DOCUMENT.
CE PLAN EST UN DOCUMENT CONTROLE.

DIMENSIONS: mm

TOLERANCES UNLESS OTHERWISE SPECIFIED. TOLERANCES NON SPECIFIEES (SUIV.NB DE DECIMALES)
0: PLC/DEC: ±
1: PLC/DEC: ±0.3
2: PLC/DEC: ±
3: PLC/DEC: ±
4: PLC/DEC: ±
ANGLES ±5°

MATERIAL MATIERE –
FINISH FINITION –

DWN/DESSINE Remi PATIN 05-MAR-03
CHK/VERIFIE JP PICAUD 05-MAR-03
APVD/APPROUVE J DAHER 05-MAR-03
PRODUCT SPEC SPEC. PRODUIT –
APPLICATION SPEC SPEC. APPLICATION –
WEIGHT MASSE APPROX. –

tyco Electronics
TYCO ELECTRONICS FRANCE SAS
BP 39, 95301 CERGY-PONTOISE CEDEX

NAME TITRE: 15 WAY MODULE FOR JPT TAB ASSY

SIZE FORMAT	CAGE CODE	DRAWING NO TITRE	RESTRICTED TO
A1	00779	C-185049	–

CUSTOMER DRAWING/PLAN CLIENT — UNIQUEMENT POUR REFERENCE — SCALE ECHELLE 2:1 — SHEET FEUILLE 1 OF DE 1 — REV F

AMP 480S REV 01/2001 (FR)

Downloaded From Oneyac.com

单击下面可查看定价，库存，交付和生命周期等信息

>>TE Connectivity(泰科)

Downloaded From Oneyac.com