THIS DRAWING IS UNPUBLISHED. RELEASED FOR PUBLICATION - , - .
© COPYRIGHT - By - ALL RIGHTS RESERVED.

LOC	DIST
GP	00

REVISIONS

P	LTR	DESCRIPTION	DATE	DWN	APVD
	AE2	REVISED PER ECO-11-005033	23MAR11	RK	HMR

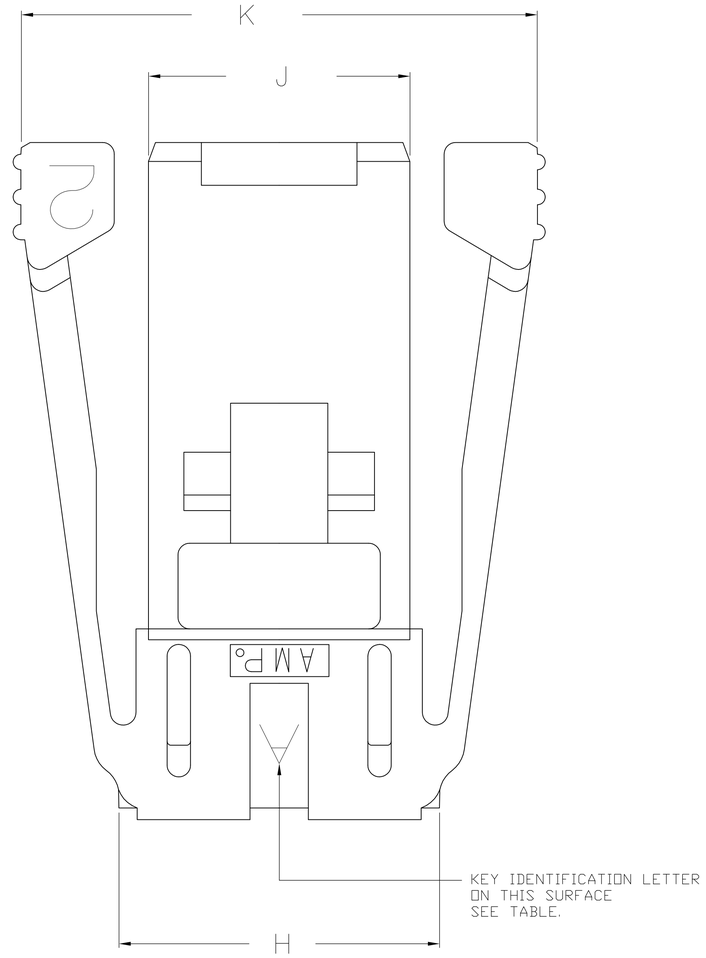

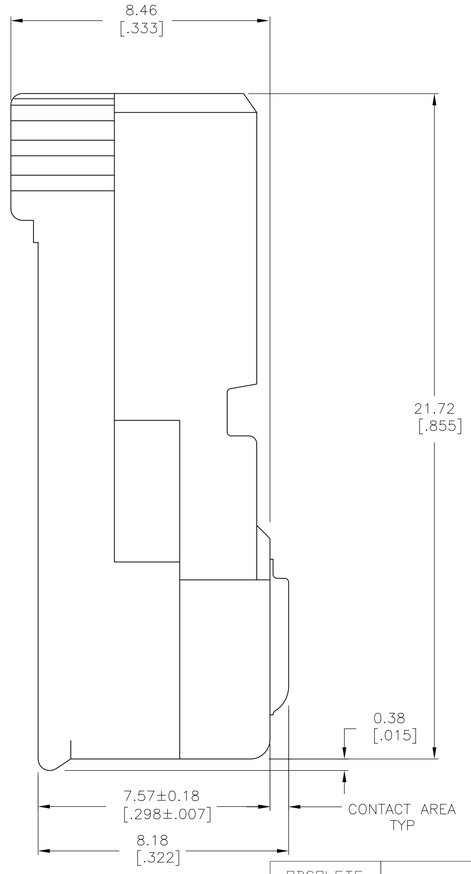

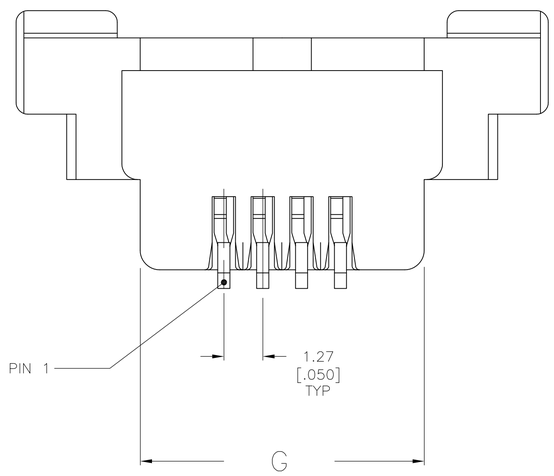

1. PREFIX AND SUFFIX NUMBERS MUST MATCH THOSE ON RECEPTACLE FOR PARTS TO MATE.

2. MATERIAL:
   HOUSING- POLYCARBONATE
   CONTACT- COPPER ALLOY

3. FINISH:
   HOUSING- SMOKE GRAY
   CONTACT- 0.00127[.000050] MIN NICKEL OVER ENTIRE PART,
   0.00002[.000001] MIN GOLD FLASH OVER ENTIRE PART,
   0.00127[.000050] MIN GOLD OVER CONTACT AREA.

4. CABLES SHOULD MEET AMP DRAWING SPECIFICATIONS 520704-1.

5. CABLES SHOULD MEET AMP DRAWING SPECIFICATIONS 520705-1.

6. CABLES SHOULD MEET AMP DRAWING SPECIFICATIONS 520706-1.

7. CABLES SHOULD MEET AMP DRAWING SPECIFICATIONS 520707-1.

8. BULK CABLE IS NOT AVAILABLE FROM AMP INC.

9. FOR TERMINATION OF 24 AWG, 7 STRANDED, ROUND CABLE WITH 1.27[.050] NOMINAL O.D. CONDUCTOR INSULATION, PER LISTED DRAWING SPECIFICATIONS.

BOOT	TOP SHIELD	BOTTOM SHIELD	CABLE OD/FERRULE		CABLE OD/FERRULE		K	J	H	G	NO OF POSN	KEY I.D. LETTER	PART NO
OBSOLETE							16.87 [.664]	8.64 [.340]	10.46 [.412]	9.35 [.368]	4	F	4 6-520424-1
	520854-1	520466-1	520467-1	5.82-6.91 [.229-.272]	520440-1	7.32-7.82 [.288-.308]	520441-1	32.11 [1.264]	23.88 [.940]	25.70 [1.012]	24.59 [.968]	16	E	7 5-520424-6
	520853-1	520464-1	520465-1	4.55-5.38 [.179-.212]	520436-1	5.69-6.20 [.224-.244]	520437-1	21.95 [.864]	13.72 [.540]	15.54 [.612]	14.43 [.568]	8	E	6 5-520424-3
OBSOLETE	520852-1	520462-1	520463-1	——	——	5.36-5.72 [.211-.225]	520435-1	19.41 [.764]	11.18 [.440]	13.00 [.512]	11.89 [.468]	6	E	5 5-520424-2
	520851-1	520460-1	520461-1	3.73-4.42 [.147-.174]	520432-1	4.72-5.08 [.186-.200]	520433-1	16.87 [.664]	8.64 [.340]	10.46 [.412]	9.35 [.368]	4	E	4 5-520424-1
OBSOLETE								21.95 [.864]	13.72 [.540]	15.54 [.612]	14.43 [.568]	8	D	6 4-520424-3
OBSOLETE								19.41 [.764]	11.18 [.440]	13.00 [.512]	11.89 [.468]	6	D	5 4-520424-2
	520851-1	520460-1	520461-1	3.73-4.42 [.147-.174]	520432-1	4.72-5.08 [.186-.200]	520433-1	16.87 [.664]	8.64 [.340]	10.46 [.412]	9.35 [.368]	4	D	4 4-520424-1
	520853-1	520464-1	520465-1	4.55-5.38 [.179-.212]	520436-1	5.69-6.20 [.224-.244]	520437-1	21.95 [.864]	13.72 [.540]	15.54 [.612]	14.43 [.568]	8	C	6 3-520424-3
OBSOLETE								19.41 [.764]	11.18 [.440]	13.00 [.512]	11.89 [.468]	6	C	5 3-520424-2
OBSOLETE								16.87 [.664]	8.64 [.340]	10.46 [.412]	9.35 [.368]	4	C	4 3-520424-1
OBSOLETE								32.11 [1.264]	23.88 [.940]	25.70 [1.012]	24.59 [.968]	16	C	7 3-520424-6
OBSOLETE								21.95 [.864]	13.72 [.540]	15.54 [.612]	14.43 [.568]	8	B	6 2-520424-3
OBSOLETE								19.41 [.764]	11.18 [.440]	13.00 [.512]	11.89 [.468]	6	B	5 2-520424-2
OBSOLETE	520851-1	520460-1	520461-1	3.73-4.42 [.147-.174]	520432-1	4.72-5.08 [.186-.200]	520433-1	16.87 [.664]	8.64 [.340]	10.46 [.412]	9.35 [.368]	4	B	4 2-520424-1
	520854-1	520466-1	520467-1	5.82-6.91 [.229-.272]	520440-1	7.32-7.82 [.288-.308]	520441-1	32.11 [1.264]	23.88 [.940]	25.70 [1.012]	24.59 [.968]	16	A	7 1-520424-6
	520853-1	520464-1	520465-1	4.55-5.38 [.179-.212]	520436-1	5.69-6.20 [.224-.244]	520437-1	21.95 [.864]	13.72 [.540]	15.54 [.612]	14.43 [.568]	8	A	6 1-520424-3
	520852-1	520462-1	520463-1	——	——	5.36-5.72 [.211-.225]	520435-1	19.41 [.764]	11.18 [.440]	13.00 [.512]	11.89 [.468]	6	A	5 1-520424-2
	520851-1	520460-1	520461-1	3.73-4.42 [.147-.174]	520432-1	4.72-5.08 [.186-.200]	520433-1	16.87 [.664]	8.64 [.340]	10.46 [.412]	9.35 [.368]	4	A	4 1-520424-1

THIS DRAWING IS A CONTROLLED DOCUMENT.

DIMENSIONS: mm [INCHES]

TOLERANCES, UNLESS OTHERWISE SPECIFIED:
0 PLC ± -
1 PLC ± -
2 PLC ± 0.25 [.010]
3 PLC ± -
4 PLC ± -
ANGLES ± -

MATERIAL 2
FINISH 3

DWN B. MCMASTER 09FEB2004
CHK C. ROHDE 09FEB04
APVD M. WALMSLEY 09FEB04
PRODUCT SPEC 108-2047
APPLICATION SPEC 114-2090
WEIGHT -

TE Connectivity

NAME PLUG SUB-ASSY, ROUND CABLE, 50 SERIES, SDL

SIZE	CAGE CODE	DRAWING NO	RESTRICTED TO
A1	00779	C-520424	-

CUSTOMER DRAWING | SCALE 1:1 | SHEET 1 OF 1 | REV AE2

4805 (3/11)

Downloaded From Oneyac.com

单击下面可查看定价，库存，交付和生命周期等信息

>>TE Connectivity(泰科)

Downloaded From Oneyac.com