THIS DRAWING IS UNPUBLISHED. RELEASED FOR PUBLICATION 20
© COPYRIGHT 20 - ALL RIGHTS RESERVED.

LOC	DIST
HK	00

REVISIONS

P	LTR	DESCRIPTION	DATE	DWN	APVD
	B1	REVISED PER ECO-11-005030	30APR2011	RK	HMR

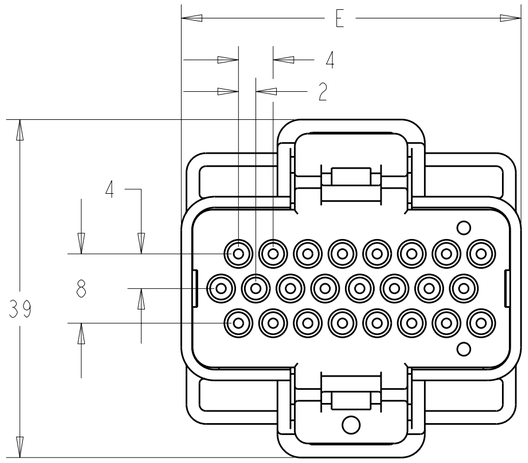

STYLE A
(WITH STIRRUPS)

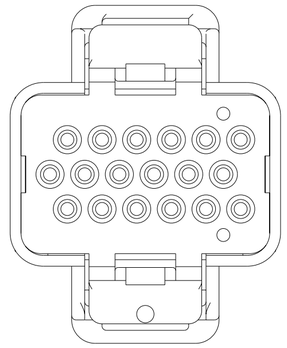

STYLE B
(WITHOUT STIRRUPS)

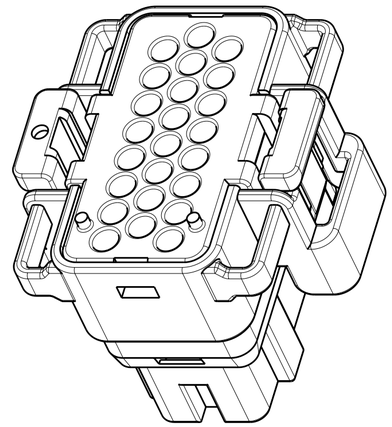

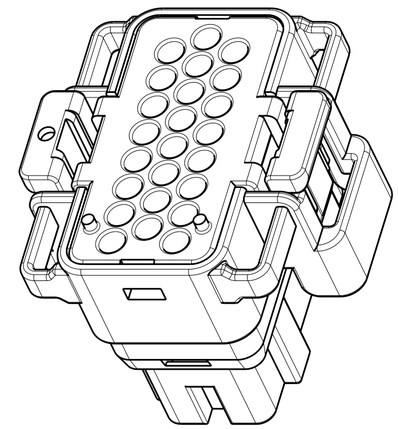

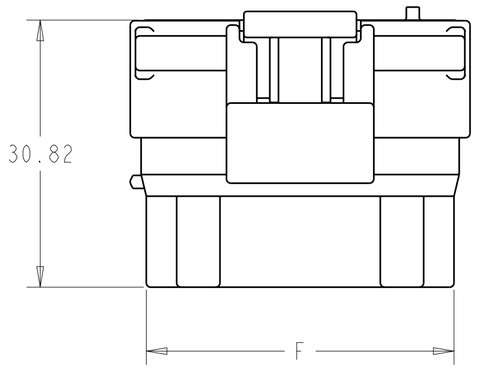

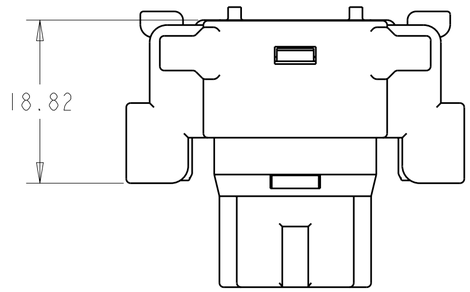

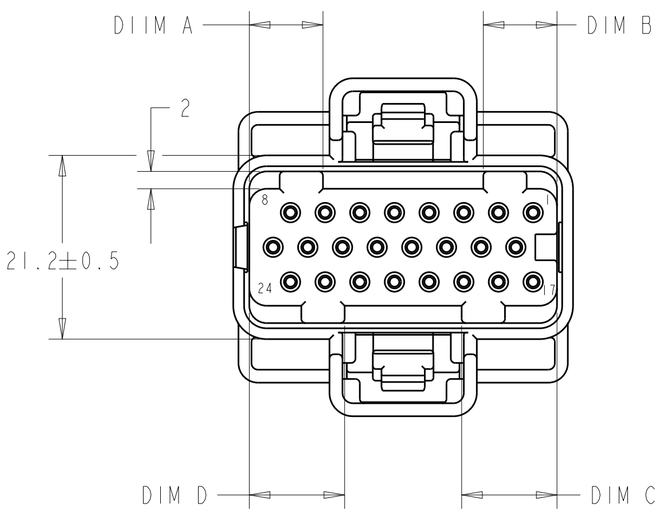

TE PART NO.	T&B PART NO.	NO. OF POSITIONS	DIM A	DIM B	DIM C	DIM D	DIM E	DIM F	STIRRUP STYLE	COLOR
4-1437287-7	130025603205	32	12.00	12.00	12.00	9.00	49.2	45.5	A	BLACK
4-1437287-5	130025602401	24	7.50	12.00	9.00	9.00	39.2	35.5	A	BLACK
4-1437287-6	130025602402	24	7.50	11.00	11.00	9.00	39.2	35.5	A	BLACK
1456016-1	130025602403	24	7.50	11.00	11.00	12.00	39.2	35.5	A	GREY
1456016-2	130025602404	24	9.00	11.00	11.00	9.00	39.2	35.5	A	GREY
1456016-3	130025602405	24	12.00	12.00	12.00	9.00	39.2	35.5	A	NATURAL
1456016-4	130025602406	24	11.00	12.00	9.00	9.00	39.2	35.5	A	NATURAL
N/A	1300256018XX	18	N/A	N/A	N/A	N/A	31.2	27.5	B	BLACK
N/A	1300256020XX	20	N/A	N/A	N/A	N/A	33.2	29.5	B	BLACK
N/A	1300256014XX	14	N/A	N/A	N/A	N/A	25.2	21.5	B	BLACK

THIS DRAWING IS A CONTROLLED DOCUMENT.

DIMENSIONS: mm

TOLERANCES UNLESS OTHERWISE SPECIFIED:

0 PLC	±1
1 PLC	±0.3
2 PLC	±0.15
3 PLC	±0.070
4 PLC	±0.0500
ANGLES	±2

MATERIAL -

FINISH -

DWN 02OCT2000 R. HARDISON
CHK 02OCT2000 R. HARDISON
APVD 02OCT2000 R. HARDISON

PRODUCT SPEC -

APPLICATION SPEC -

WEIGHT - 1

TE Connectivity

NAME SOCKET ASSEMBLY, SEALED IMM I/O CONNECTOR SYSTEM

SIZE	CAGE CODE	DRAWING NO	RESTRICTED TO
A2	00779	C-1456016	-

CUSTOMER DRAWING

SCALE 2:1 SHEET 1 OF 1 REV B1

1471-9 (3/11)

Pro/ENGINEER DRAWING

Downloaded From Oneyac.com

单击下面可查看定价，库存，交付和生命周期等信息

>>TE Connectivity(泰科)

Downloaded From Oneyac.com