THIS DRAWING IS UNPUBLISHED. RELEASED FOR PUBLICATION -,- .
© COPYRIGHT - By - ALL RIGHTS RESERVED.

LOC	DIST
AD	47

REVISIONS

P	LTR	DESCRIPTION	DATE	DWN	APVD
	A1	REVISED PER ECO-12-007590	21JUL12	KH	MH

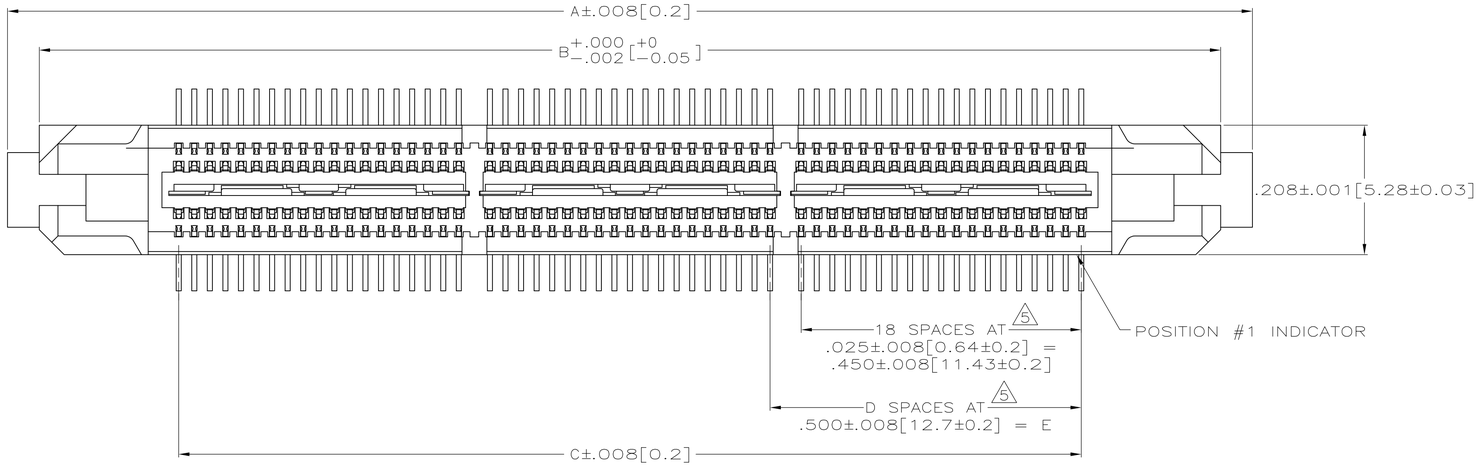

1. HOUSING: LIQUID CRYSTAL POLYMER, COLOR BLACK. CONTACTS: HIGH RELIABILITY COPPER ALLOY. GROUND BUSSES: BRASS, UNS C26000
2. CONTACTS & GROUND BUSES: NICKEL UNDERPLATE ALL OVER, MATING SURFACE PLATED TO MEET LEVEL 1 PERFORMANCE REQUIREMENTS OF TE PRODUCT SPECIFICATION 108-1422, SOLDER TAILS PLATED MATTE TIN.
3. DATE CODE MARKED IN AREA INDICATED ON SIDE OPPOSITE POSITION #1.
4. ONE GROUND BUS WITH 5 TAILS PER EACH MODULE.
5. TOLERANCE NON-ACCUMULATIVE.
6. FOR STANDARD APPLICATIONS, ORIENTATION HOLE TO BE ϕ.094±.002[2.39±0.05]. FOR SLIP-FIT APPLICATIONS, ORIENTATION HOLE TO BE ϕ.079±.001[2.00±0.03].

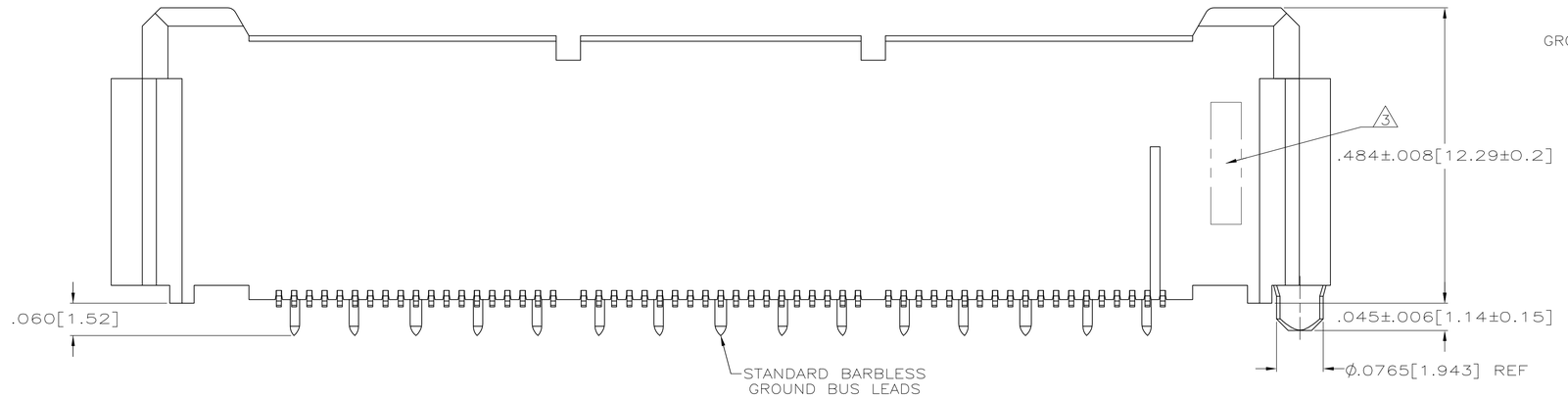

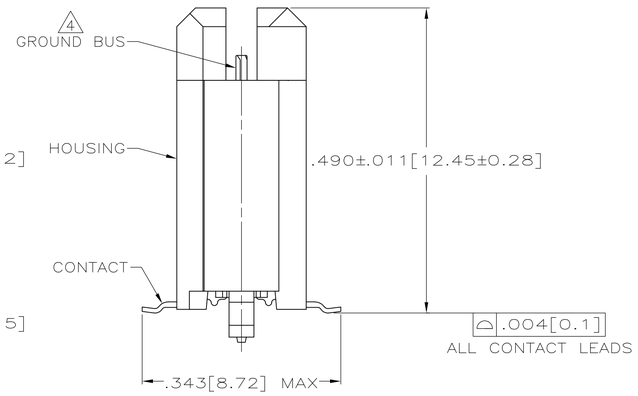

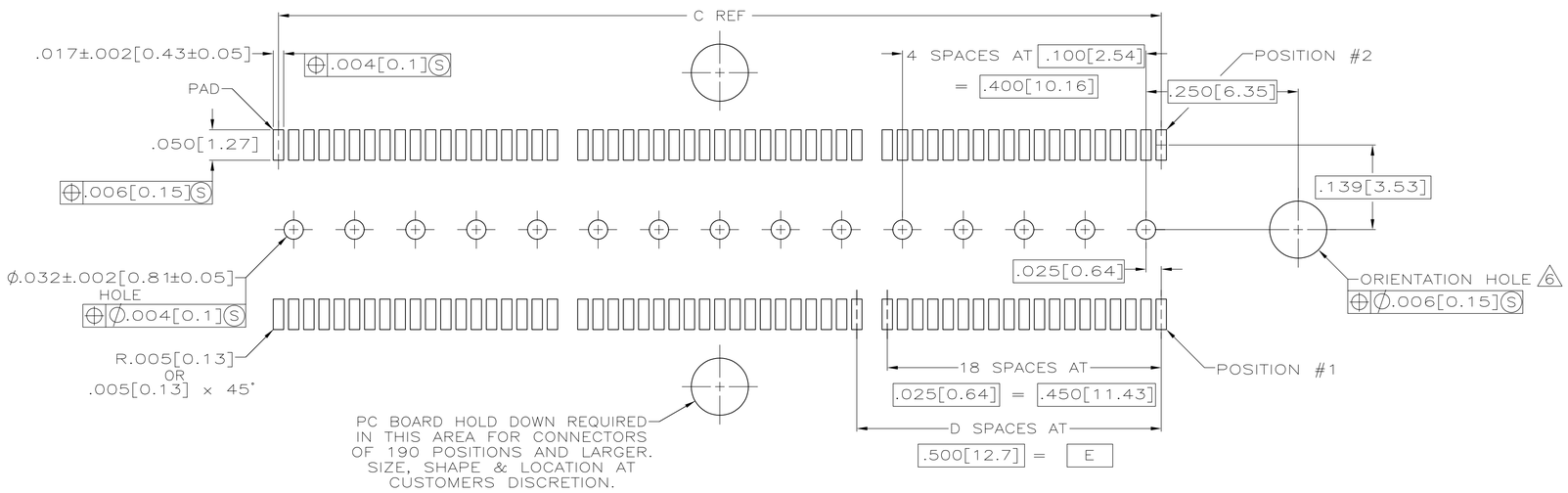

RECOMMENDED PC BOARD LAYOUT
(VIEWED FROM CONNECTOR SIDE)

F	E	D	C	B	A	NO OF POS	PART NUMBER
4.724[120]	3.000[76.2]	6	3.450[87.63]	3.898[99.01]	4.000[101.6]	266	5767120-7
4.094[104]	2.500[63.5]	5	2.950[74.93]	3.398[86.31]	3.500[88.9]	228	5767120-6
3.465[88]	2.000[50.8]	4	2.450[62.23]	2.898[73.61]	3.000[76.2]	190	5767120-5
3.465[88]	1.500[38.1]	3	1.950[49.53]	2.398[60.91]	2.500[63.5]	152	5767120-4
2.835[72]	1.000[25.4]	2	1.450[36.83]	1.898[48.21]	2.000[50.8]	114	5767120-3
2.205[56]	.500[12.7]	1	.950[24.13]	1.398[35.51]	1.500[38.1]	76	5767120-2
1.732[44]	.000[0]	0	.450[11.43]	.898[22.81]	1.000[25.4]	38	5767120-1

THIS DRAWING IS A CONTROLLED DOCUMENT.

DIMENSIONS: INCHES

TOLERANCES UNLESS OTHERWISE SPECIFIED:
0 PLC ± –
1 PLC ± –
2 PLC ± –
3 PLC ± .005[0.13]
4 PLC ± –
ANGLES ± –

MATERIAL 1

FINISH 2

DWN C. ATTADIA 27 OCT 04
CHK D. DIXON 27 OCT 04
APVD D. DIXON 27 OCT 04
PRODUCT SPEC 108-1422
APPLICATION SPEC 114-11004
WEIGHT –

TE Connectivity

NAME PLUG ASSEMBLY, .495[12.57] VERTICAL, .025[0.64] CL, GULL WING LEADS, MICTOR

SIZE A1 | CAGE CODE 00779 | DRAWING NO C-5767120 | RESTRICTED TO –

CUSTOMER DRAWING | SCALE 1:1 | SHEET 1 OF 1 | REV A1

4805 (3/11)

Downloaded From Oneyac.com

单击下面可查看定价，库存，交付和生命周期等信息

>>TE Connectivity(泰科)

Downloaded From Oneyac.com