NUMBER C-5178647

METRIC

3rd ANGLE PROJECTION

DIMENSIONS IN MILLIMETERS. DO NOT SCALE PRINT

PRINT DATE

LEAD FREE

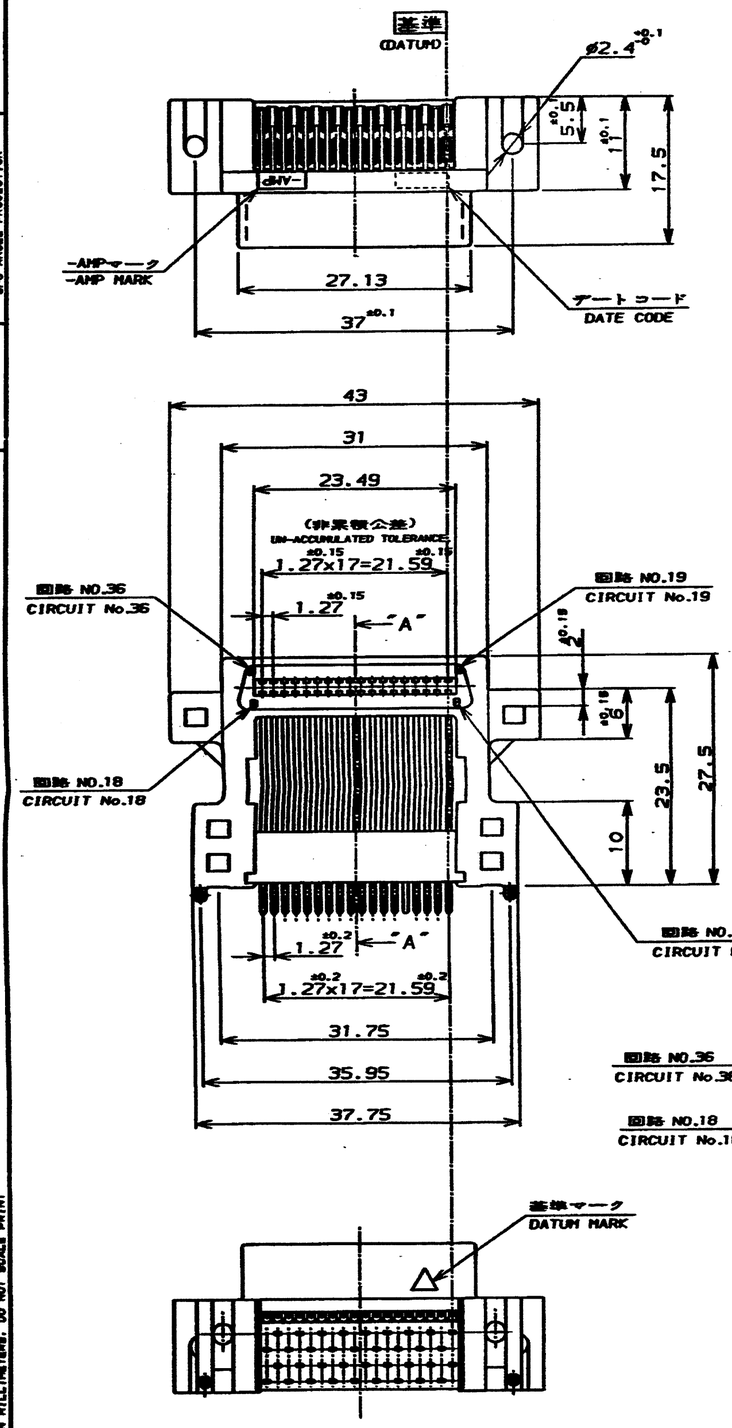


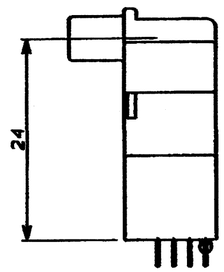


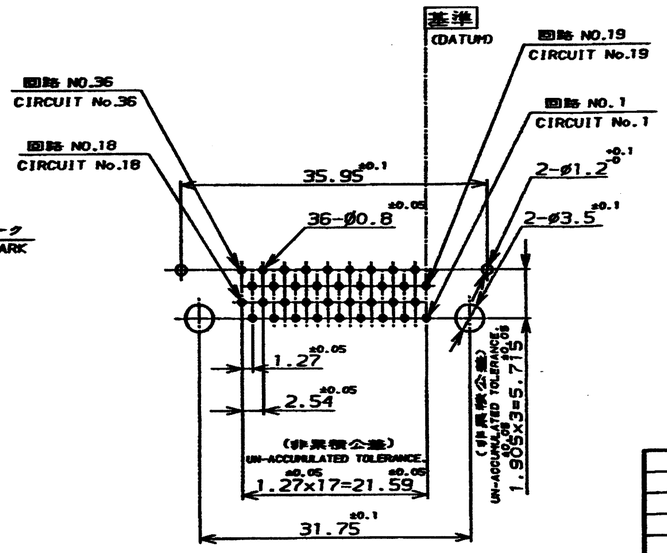


基板穴位置 P.C.B HOLE LAYOUT
(コネクタ搭載面) (CONN'MOUNT.SIDE)

NOTES:

1. NUMBER "n" IS COUNTED FROM DATUM
2. MATERIAL: HOUSING, AND TINE PLATE: 66 NYLON(GF) UL 94V-0, BLACK.
   : CONTACT, PHOSPHOR BRONZE.
3. FINISH: Au AT CONTACT AREA (SEE TABLE), TIN AT TINE, OVER Ni.
4. FOR SECURING CONNECTOR, USE CROSS=RECESSED PAN HEAD TAPPING SCREW CLASS 2, M3x8mm. (SCREW-IN TORQUE TO BE 4Kgcm MAX.)

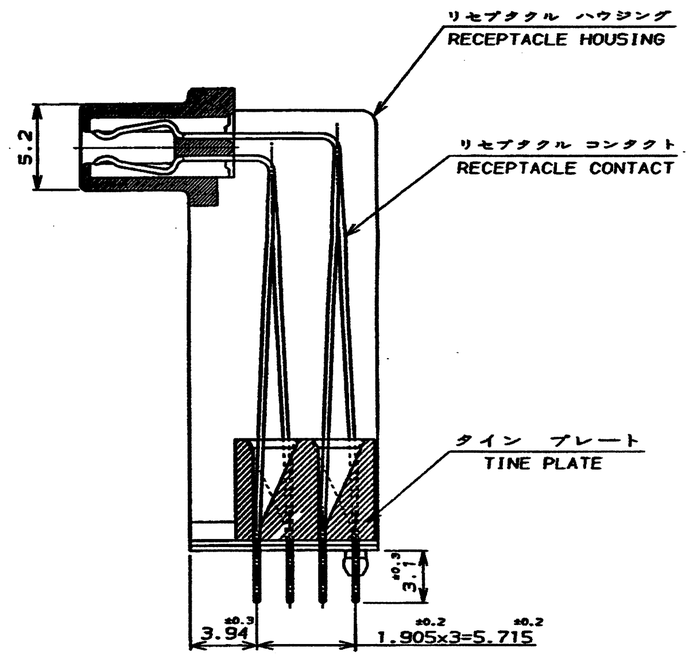


SECT. "A"-"A"
(SCALE 4-1)

| | | |
|---|---|---|
| 36 | 0.2 μ | 5178647-4 |
| POS | Au PLATE | P/N |

tyco Electronics — Tyco Electronics AMP K.K. Kawasaki, Japan

| LTR | REVISION RECORD | DR | CHK | DATE |
|---|---|---|---|---|
| 0 | ACTIVATE FJB0-0871-04 | L.Z | I.E | Oct.8 '04 |

WIRE RANGE: mm² (AWG - ) | INSULATION DIA: - mm

MATERIAL: 2 | FINISH: 3

DR. LEO ZHOU Oct.8'04 | DE. | CHK. STEVEN YAO Oct.8'04 | APP. I.ENOMOTO Oct.8'04

NAME: チャンプ 050(I) コネクタ (B-T-B) CHAMP.050 (I) CONN. B-T-B リセプタクル コネクタ ホリゾンタル タイプ RECEPTACL CONN. "H" TYPE

GENERAL TOLERANCE: 0<=< 10 : ±0.2; 10<=< 30 : ±0.25; 30<=<100 : ±0.3; ANGLES : ±3°

SIZE A2 | LOC J | NUMBER C-5178647 | SCALE 2-1 | REV. 0 | SHEET 1 OF 1

CUSTOMER DRAWING

Downloaded From Oneyac.com

单击下面可查看定价，库存，交付和生命周期等信息

>>TE Connectivity(泰科)

Downloaded From Oneyac.com