THIS DRAWING IS UNPUBLISHED. RELEASED FOR PUBLICATION – .– .
© COPYRIGHT – By – ALL RIGHTS RESERVED.

LOC	DIST
I	—

REVISIONS

P	LTR	DESCRIPTION	DATE	DWN	APVD
	M 1	ECO-15-014129	28-09-2015	M.P.	M.G.

CONNETTORE TIPO A (CON MOLLA DI RITEGNO ESTERNA)
CONNECTOR TYPE A (WITH EXTERNAL SPRING)

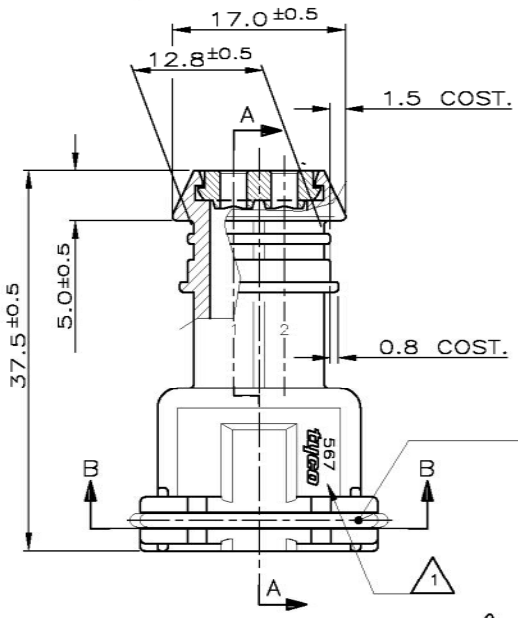

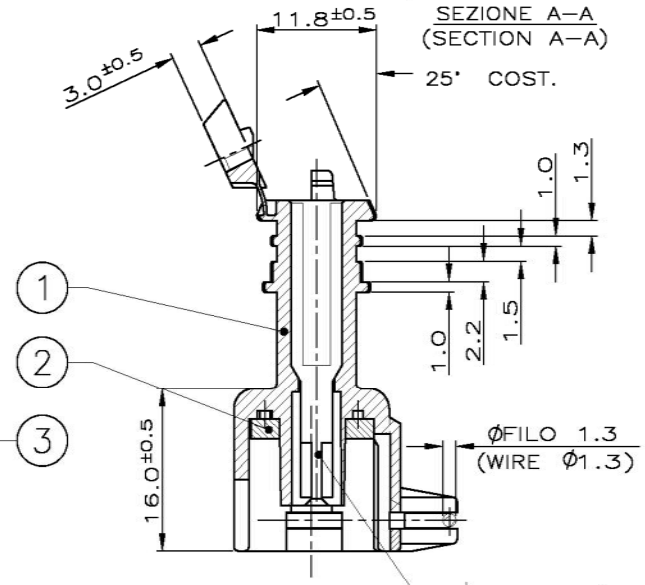

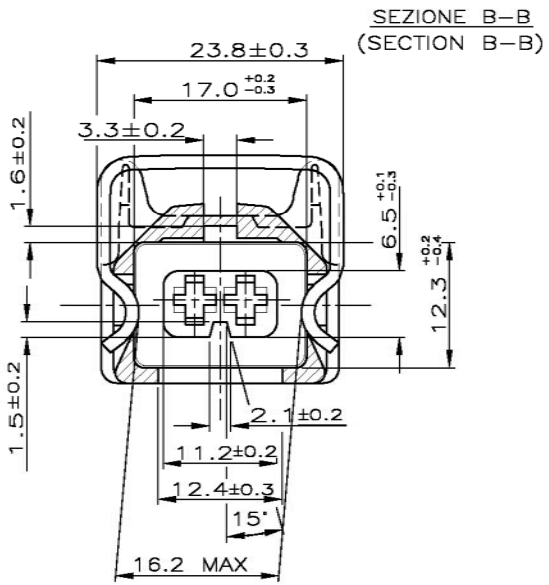

TIP. CAVITA' PER TERMINALI AMP JPT P/N 929939–...
OPPURE 929937–... E RELATIVI GOMMINI
AMP P/N 828904–1, 828905–1, 282536–1.
TAPPO CAVITA' P/N 828906–2

(TYP. CAV. FOR JPT CONT. P/N 929939–.. A/O 929937–.. AND REL.
SINGLE WIRE SEAL P/N 828904–1, 828905–1, 282536–1
CAVITY PLUG P/N 828906–2)

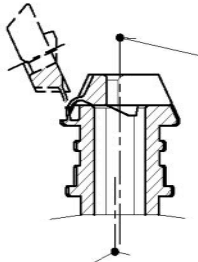

ASSE CAVITA'
(CAVITY CENTER LINE)

ASSE CONNETTORE
(CONNECTOR CENTER LINE)

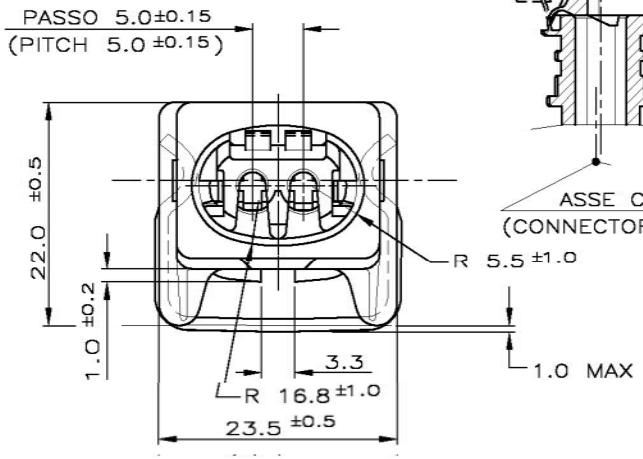

NERO(BLACK)	2–282189–1 △2	METRIC	DIAM. ISOLANTE (INS. DIA. RANGE) 1.5–3.0 (REDUCED INS.CABLE)	RANGO FILO (WIRE RANGE) 0.5–2.5 mm²	
ROSSO (RED)	282189–8	CUSTOMER DWG. FOR REFERENCE ONLY		DISEGNO PER CLIENTE SOLO PER RIFERIMENTO	
GIALLO(YELLOW)	282189–7				
MARRONE(BROWN)	282189–6	3	\\\\\\\	ACCIAIO INOX (STAINLESS STEEL)	MOLLA (SPRING)
BLU (BLUE)	282189–5				
VERDE(GREEN)	282189–4	2	NATURALE (CLEAR)	GOMMA SILICONICA (SILICONE RUBBER)	GUARNIZIONE (RUBBER GASKET)
BIANCO (WHITE)	282189–3				
GRIGIO(GREY)	282189–2	1	\\\\\\\	PA 6.6	BLOCCHETTO (HOUSING)
NERO(BLACK)	282189–1				
COLORE COLOR	NUMERO PART. N°	N (ITEM)	FINITURA / COLORE (FINISH / COLOUR)	MATERIALE (MATERIAL)	DESCRIZIONE (DESCRIPTION)

△1 LOGO TYCO O, IN ALTERNATIVA, LOGO AMP
(TYCO LOGO OR, IN ALTERNATIVE, AMP LOGO) (AMP)

△2 DIFFERISCE DAL ..–1 ESCLUSIVAMENTE PER IL PACKAGING
(DIFFERS FROM ..–1 ONLY FOR PACKAGING DETAILS)

3) PER DIMENSIONI CONTROPARTE VEDERE FOGLIO 2
(FOR COUNTERPART DIMENSIONS SEE SHEET 2)

4) SPECIFICA DI IMBALLO TE Nr. 107-20047 (TE PACKAGING SPECIFICATION No.107-20047)

THIS DRAWING IS A CONTROLLED DOCUMENT.

DIMENSIONS: mm

TOLERANCES UNLESS OTHERWISE SPECIFIED:

0 PLC	± –
1 PLC	± 0.3
2 PLC	± –
3 PLC	± –
4 PLC	± –
ANGLES	± 2°

MATERIAL –
FINISH –

DWN Ennio CINI NOV. 9.'90
CHK C.TARTARI 13 OCT 92
APVD —
PRODUCT SPEC —
APPLICATION SPEC —
WEIGHT —

TE Connectivity

NAME
2 W.SPLASH PROOF CONN.ASS'Y
with SECONDARY LOCK

SIZE	CAGE CODE	DRAWING NO	RESTRICTED TO
A3	00779	C–282189	—

CUSTOMER DRAWING | SCALE — | SHEET 1 OF 2 | REV M1

1470–19 (3/11)

Downloaded From Oneyac.com

THIS DRAWING IS UNPUBLISHED. RELEASED FOR PUBLICATION – ,– .
© COPYRIGHT – By – ALL RIGHTS RESERVED.

LOC	DIST
I	—

REVISIONS

P	LTR	DESCRIPTION	DATE	DWN	APVD
	–	SEE SHEET 1	–	—	—

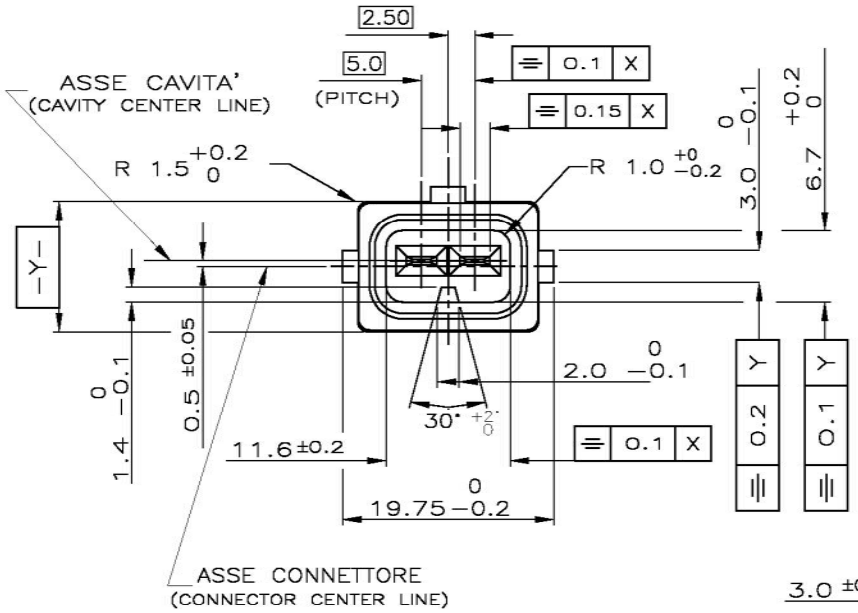

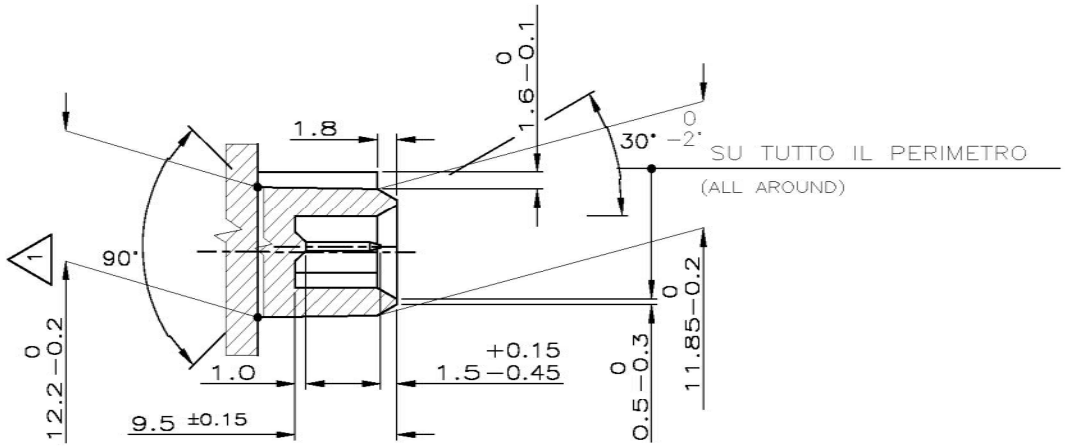

DETT. LINGUETTA TAB–SCALA 5:1–
(TAB DETAIL)

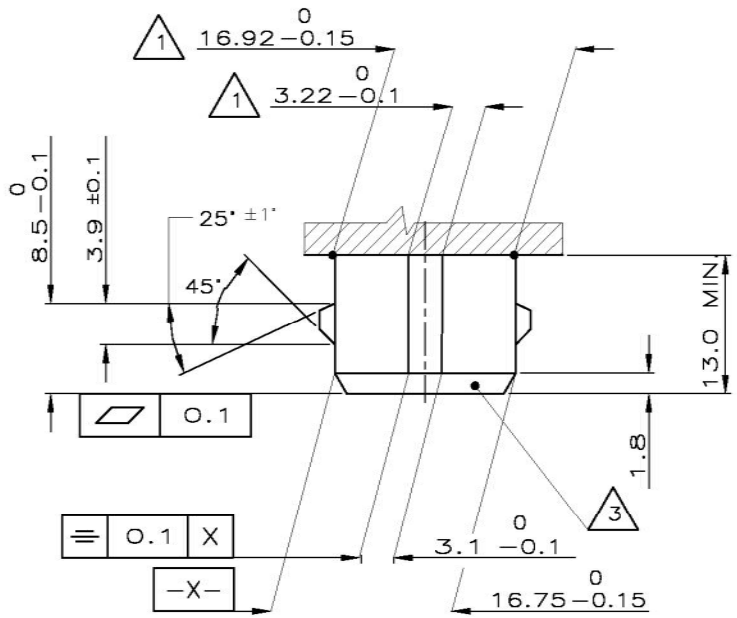

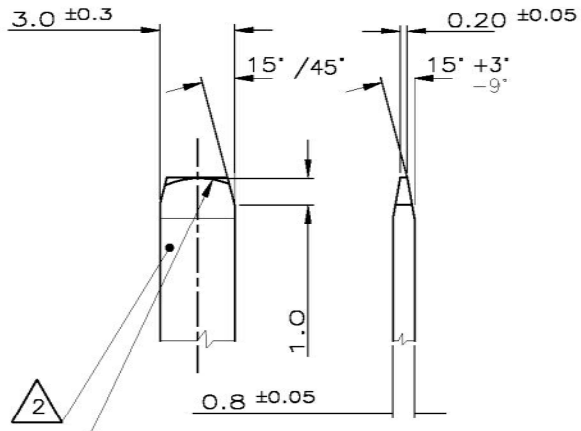

1. QUOTE APPLICABILI PER SFORMATURA PEZZO (DRAFT PERMITTED TO FACILITATE REMOVAL OF PART FROM THE MOULD)
2. MATERIALE LINGUETTE: LEGA DI RAME STAGNATA,ES. OTTONE STAGNATO. (TAB CONTACT MATERIAL: TIN PLATED COPPER ALLOY. E.G. BRASS TIN PLATED
3. MATERIALE BLOCCHETTO: TERMOPLASTICO CARICATO FIBRA VETRO. (HOUSING MATERIAL: THERMOPLASTIC, GLASS FIBER FILLED)

METRIC

DIAM. ISOLANTE (INS. DIA. RANGE)	RANGO FILO (WIRE RANGE)
---	---

CUSTOMER DWG. FOR REFERENCE ONLY

DISEGNO PER CLIENTE SOLO PER RIFERIMENTO

THIS DRAWING IS A CONTROLLED DOCUMENT.

DIMENSIONS: mm

TOLERANCES UNLESS OTHERWISE SPECIFIED:

0 PLC	± –
1 PLC	± 0.3
2 PLC	± –
3 PLC	± –
4 PLC	± –
ANGLES	± 2°

MATERIAL –

FINISH –

DWN	–
CHK	–
APVD	—
PRODUCT SPEC	—
APPLICATION SPEC	—
WEIGHT	—

TE Connectivity

NAME: 2 POS.SPLASH PROOF CONN.ASS'Y with SECONDARY LOCK

SIZE	CAGE CODE	DRAWING NO	RESTRICTED TO
A3	00779	C-282189	—

CUSTOMER DRAWING | SCALE — | SHEET 2 OF 2 | REV M1

FINITURA / COLORE (FINISH / COLOUR)	MATERIALE (MATERIAL)	NUMERO (PART NUMBER)

1470–19 (3/11)

Downloaded From Oneyac.com

单击下面可查看定价，库存，交付和生命周期等信息

>>TE Connectivity(泰科)

Downloaded From Oneyac.com