THIS DRAWING IS UNPUBLISHED. RELEASED FOR PUBLICATION -.- .
© COPYRIGHT – TE Connectivity ALL RIGHTS RESERVED.

REVISIONS

P	LTR	DESCRIPTION	DATE	DWN	APVD
	A1	REVISE PER ECO-17-007596	25MAY2017	LN	RS

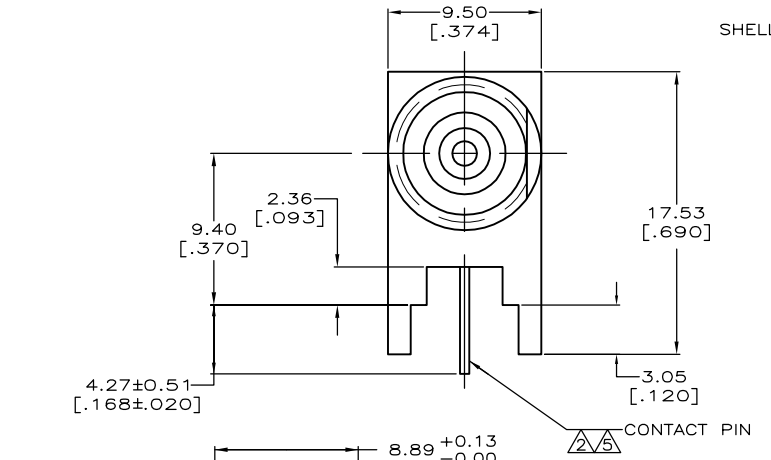

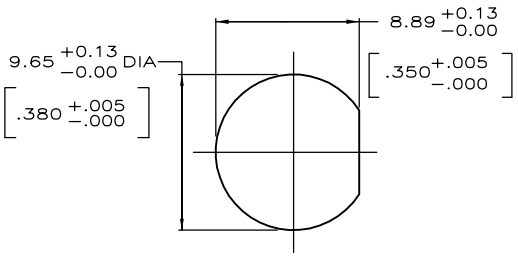

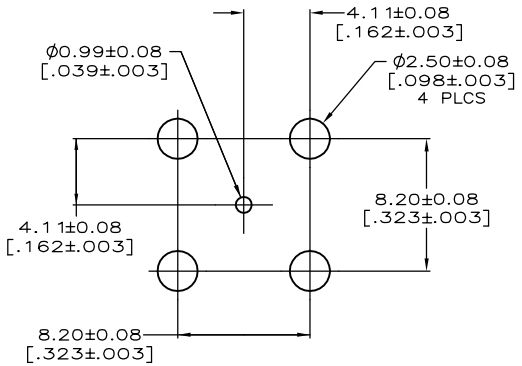

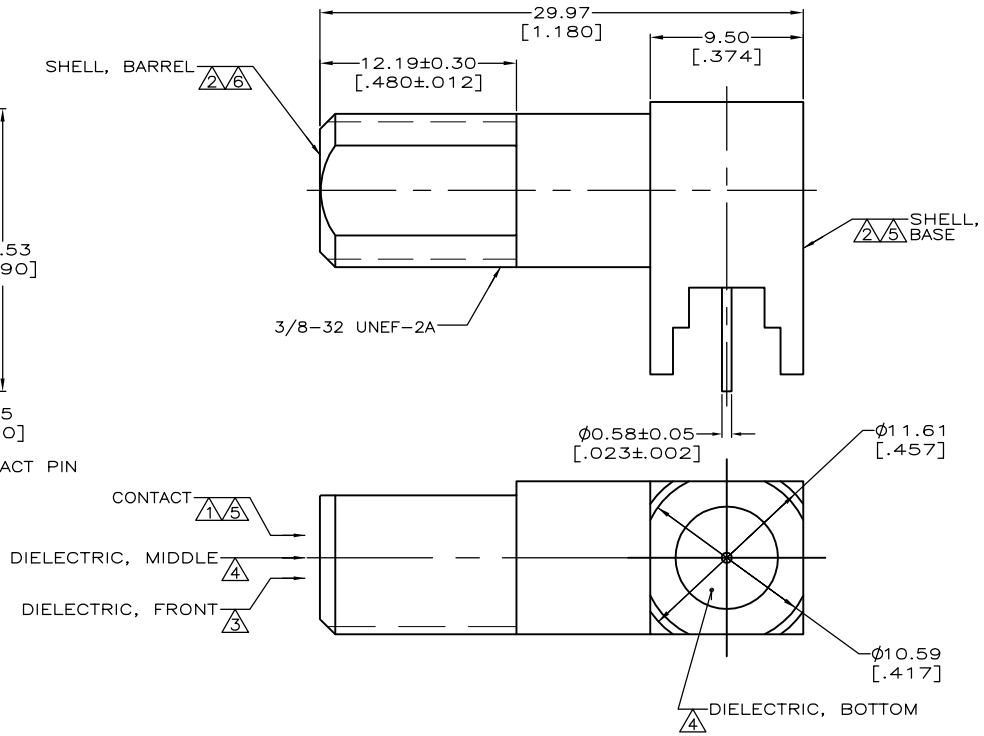

1. PHOSPHOR BRONZE.
2. BRASS.
3. POLYPROPYLENE, GENERAL PURPOSE
4. ACETAL, GENERAL PURPOSE
5. TIN PLATE 2.54 μm [.000100] MINIMUM THICK.
6. NICKEL PLATE 2.54 μm [.000100] MINIMUM THICK.
7. CONNECTOR WILL ACCEPT CENTER CONDUCTOR DIAMETER RANGE OF 0.51[.020]–1.19[.047].

OBSOLETE

5887078-1

PART NUMBER

PCB CONFIGURATION

THIS DRAWING IS A CONTROLLED DOCUMENT.

DIMENSIONS: mm [INCHES]

TOLERANCES UNLESS OTHERWISE SPECIFIED:
0 PLC ± –
1 PLC ± –
2 PLC ± –
3 PLC ± 0.20 [.008]
4 PLC ± –
ANGLES ± –

MATERIAL: SEE NOTES 1–4
FINISH: SEE NOTE 5 & 6

DWN 01FEB2005 L. VARELA – DOCK5
CHK 01FEB2005 J. HAVENER
APVD 01FEB2005 K. WEIDNER
PRODUCT SPEC 108-1755
APPLICATION SPEC –
WEIGHT 0
CUSTOMER DRAWING

TE Connectivity

NAME: JACK, PCB, RIGHT ANGLE, F SERIES –

SIZE	CAGE CODE	DRAWING NO	RESTRICTED TO
A2	00779	C-5887078	–

SCALE 5:1 SHEET 1 OF 1 REV A1

1471-9 (1/15)

Downloaded From Oneyac.com

单击下面可查看定价，库存，交付和生命周期等信息

>>TE Connectivity(泰科)

Downloaded From Oneyac.com