THIS DRAWING IS UNPUBLISHED. RELEASED FOR PUBLICATION AUG ,2006.
© COPYRIGHT – BY TYCO ELECTRONICS CORPORATION. ALL RIGHTS RESERVED.

LOC	DIST
DW	—

REVISIONS

P	LTR	DESCRIPTION	DATE	DWN	APVD
	B	REVISED (ECR-11-021264)	18OCT11	JC	WK

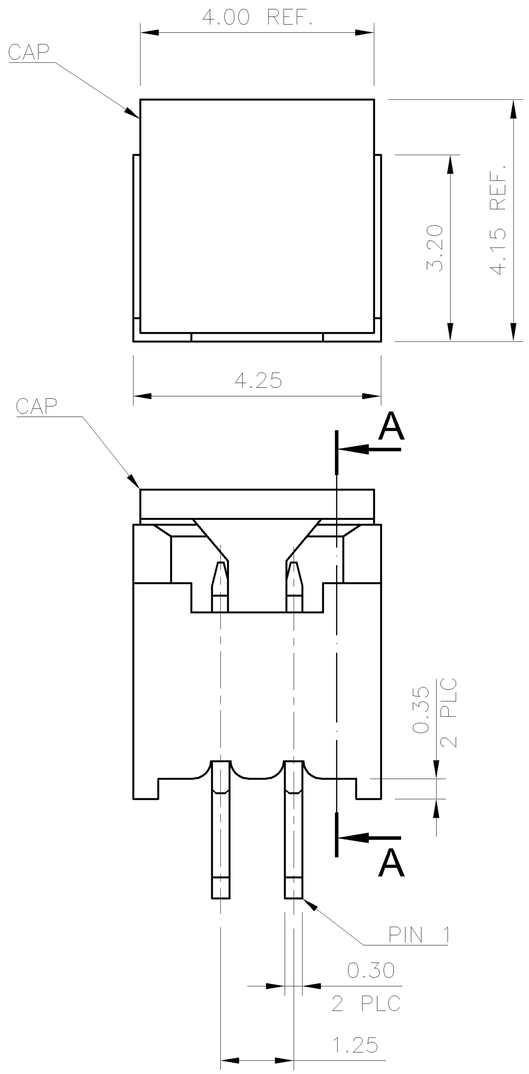

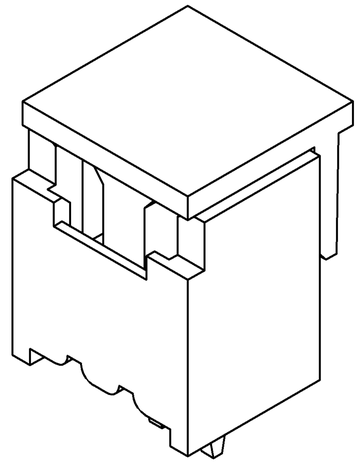

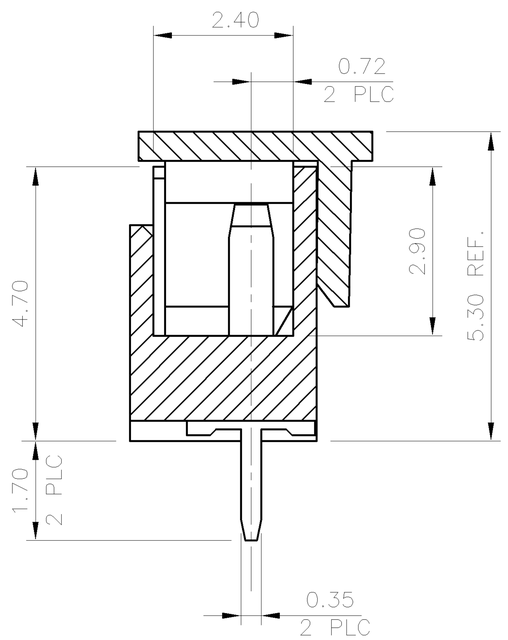

SECTION A–A

NOTE:

1. MATERIAL:
   HOUSING: THERMOPLASTIC (LCP) WITH 30% GF, UL 94V–0, NATURE COLOR.
   CAP: THERMOPLASTIC (LCP) WITH 30% GF, UL 94V–0, BLACK COLOR.
   CONTACTS: PHOSPHOR BRONZE.
2. FINISH:
   CONTACTS: 3.048μm [120μ"] MIN. MATTE–TIN PLATING OVERALL,
   1.27μm [50μ"] MIN. NICKEL PLATING ON ENTIRE CONTACT.
3. REFLOW SOLDER CAPABLE TO 260°C PER TE SPEC. 109–201, CONDITION B.
4. NO TE LOGO AND DATE CODE ON THE PRODUCT.
5. LOW HALOGEN SPECIFICATION:
   CHLORINE(Cl): 900ppm MAX.
   BROMINE(Br): 900ppm MAX.
6. ALTERNATE P/N (MATERIAL: PA9T, NON LH) IS 1734598–2.

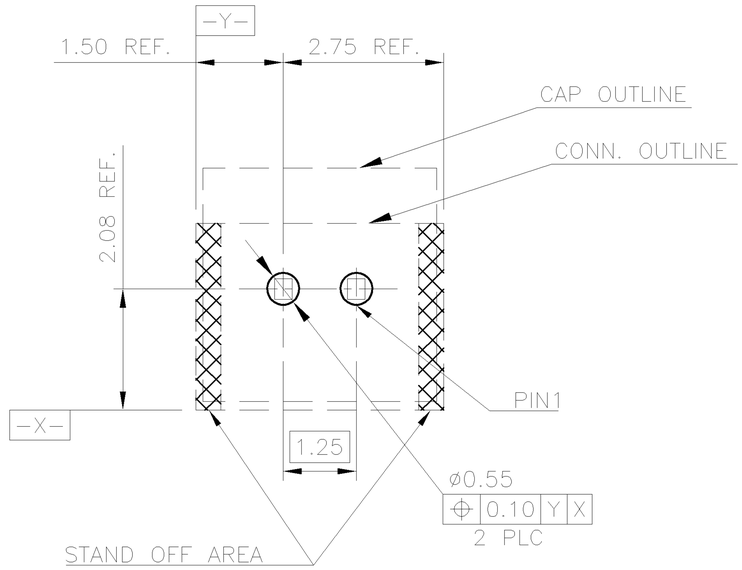

RECOMMENDED PCB LAYOUT <TOP VIEW>

TOLERANCE: ±0.05, THICKNESS: 1.2MM

TAPE & REEL	2041282–2
PACKAGE	PART NUMBER

THIS DRAWING IS A CONTROLLED DOCUMENT.

DIMENSIONS: MM

TOLERANCES UNLESS OTHERWISE SPECIFIED:

0 PLC	± –
1 PLC	± 0.3
2 PLC	± 0.2
3 PLC	± 0.15
4 PLC	± –
ANGLES	± 3°

MATERIAL: SEE NOTE

FINISH: SEE NOTE

DWN J. CHEN 03AUG2010
CHK S. CHIEN 03AUG2010
APVD W. KODAMA 03AUG2010
PRODUCT SPEC 108–57273
APPLICATION SPEC —
WEIGHT 0.12 GRAMS

TE Connectivity

NAME
1.25 MM PITCH WIRE TO BOARD
CONNECTOR, HEADER, DIP, VERTICAL, WITH CAP

SIZE	CAGE CODE	DRAWING NO	RESTRICTED TO
A3	00779	C–2041282	—

CUSTOMER DRAWING | SCALE — | SHEET 1 OF 4 | REV B

THIS DRAWING IS UNPUBLISHED. RELEASED FOR PUBLICATION AUG ,2006.
© COPYRIGHT – BY TYCO ELECTRONICS CORPORATION. ALL RIGHTS RESERVED.

LOC	DIST
DW	—

REVISIONS

P	LTR	DESCRIPTION	DATE	DWN	APVD
		SEE SHEET 1.			

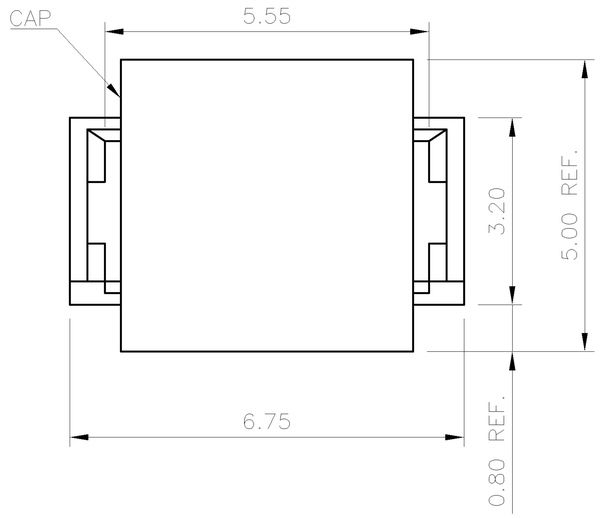

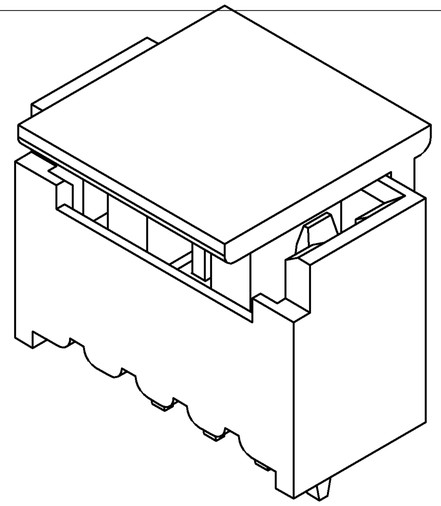

NOTE:

1. MATERIAL:
   HOUSING: THERMOPLASTIC (LCP) WITH 30% GF, UL 94V–0, NATURE COLOR.
   CAP: THERMOPLASTIC (LCP) WITH 30% GF, UL 94V–0, BLACK COLOR.
   CONTACTS: PHOSPHOR BRONZE.
2. FINISH:
   CONTACTS: 3.048μm [120μ"] MIN. MATTE–TIN PLATING OVERALL,
   1.27μm [50μ"] MIN. NICKEL PLATING ON ENTIRE CONTACT.
3. REFLOW SOLDER CAPABLE TO 260°C PER TE SPEC. 109–201, CONDITION B.
4. NO TE LOGO AND DATE CODE ON THE PRODUCT.
5. LOW HALOGEN SPECIFICATION:
   CHLORINE(Cl): 900ppm MAX.
   BROMINE(Br): 900ppm MAX.
6. ALTERNATE P/N (MATERIAL: PA9T, NON LH) IS 1734598–4.

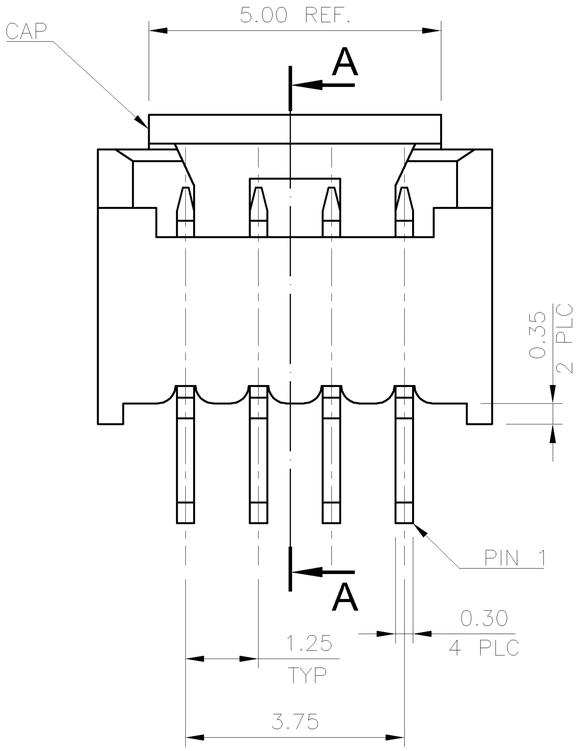

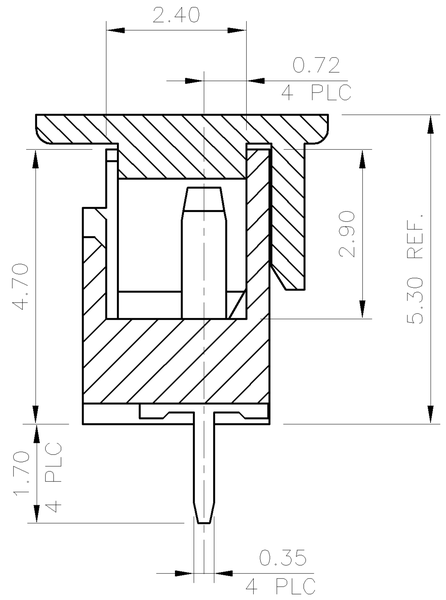

SECTION A–A

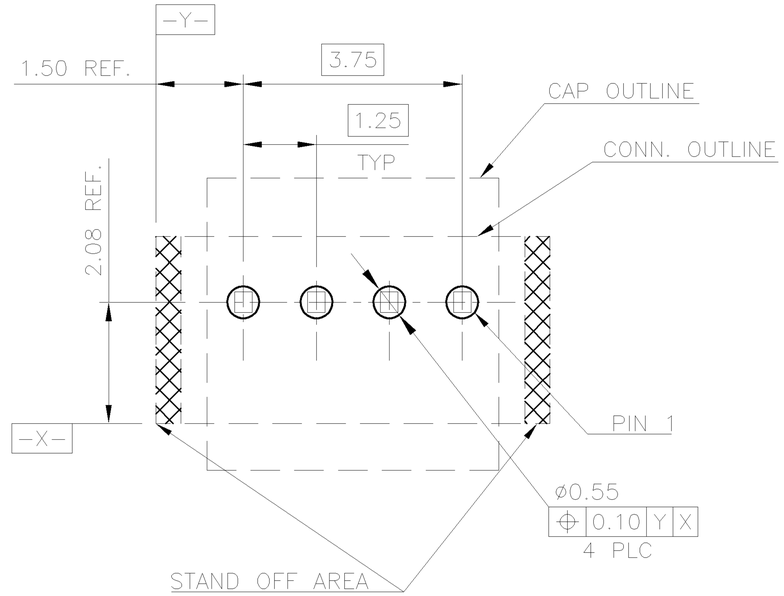

RECOMMENDED PCB LAYOUT <TOP VIEW>

TOLERANCE: ±0.05, THICKNESS: 1.2MM

TAPE & REEL	2041282–4
PACKAGE	PART NUMBER

THIS DRAWING IS A CONTROLLED DOCUMENT.

DIMENSIONS: MM

TOLERANCES UNLESS OTHERWISE SPECIFIED:

0 PLC	± –
1 PLC	± 0.3
2 PLC	± 0.2
3 PLC	± 0.15
4 PLC	± –
ANGLES	± 3°

MATERIAL: SEE NOTE

FINISH: SEE NOTE

DWN –
CHK –
APVD –
PRODUCT SPEC —
APPLICATION SPEC —
WEIGHT 0.16 GRAMS

TE Connectivity

NAME: 1.25 MM PITCH WIRE TO BOARD CONNECTOR, HEADER, DIP, VERTICAL, WITH CAP

SIZE	CAGE CODE	DRAWING NO	RESTRICTED TO
A3	00779	C–2041282	—

CUSTOMER DRAWING | SCALE — | SHEET 2 OF 4 | REV B

THIS DRAWING IS UNPUBLISHED. RELEASED FOR PUBLICATION AUG ,2006.
© COPYRIGHT – BY TYCO ELECTRONICS CORPORATION. ALL RIGHTS RESERVED.

LOC	DIST
DW	—

REVISIONS

P	LTR	DESCRIPTION	DATE	DWN	APVD
		SEE SHEET 1.			

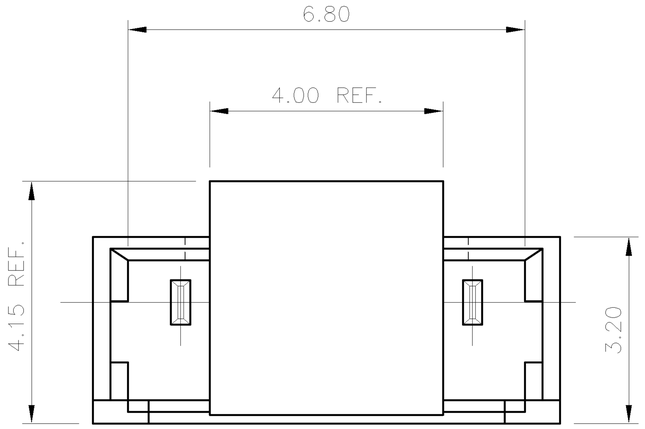

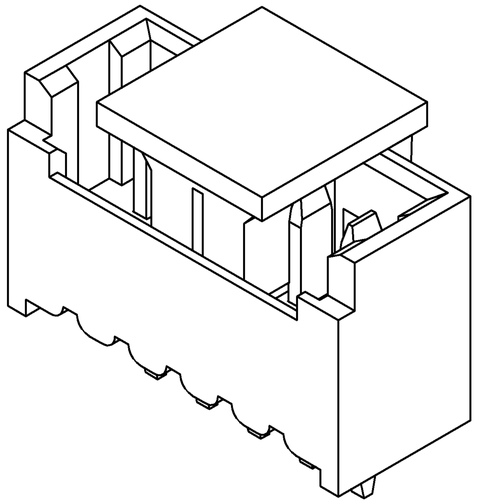

NOTE:

1. MATERIAL:
   HOUSING: THERMOPLASTIC (LCP) WITH 30% GF, UL 94V–0, NATURE COLOR.
   CAP: THERMOPLASTIC (LCP) WITH 30% GF, UL 94V–0, BLACK COLOR.
   CONTACTS: PHOSPHOR BRONZE.
2. FINISH:
   CONTACTS: 3.048μm [120μ"] MIN. MATTE–TIN PLATING OVER
   1.27μm [50μ"] MIN. NICKEL PLATING ON ENTIRE CONTACT.
3. REFLOW SOLDER CAPABLE TO 260°C PER TE SPEC. TEC–109–201, CONDITION B.
4. NO TE LOGO AND DATE CODE ON THE PRODUCT.
5. LOW HALOGEN SPECIFICATION:
   CHLORINE(Cl): 900ppm MAX.
   BROMINE(Br): 900ppm MAX.
6. ALTERNATE P/N (MATERIAL: PA9T, NON LH) IS 1734598–5

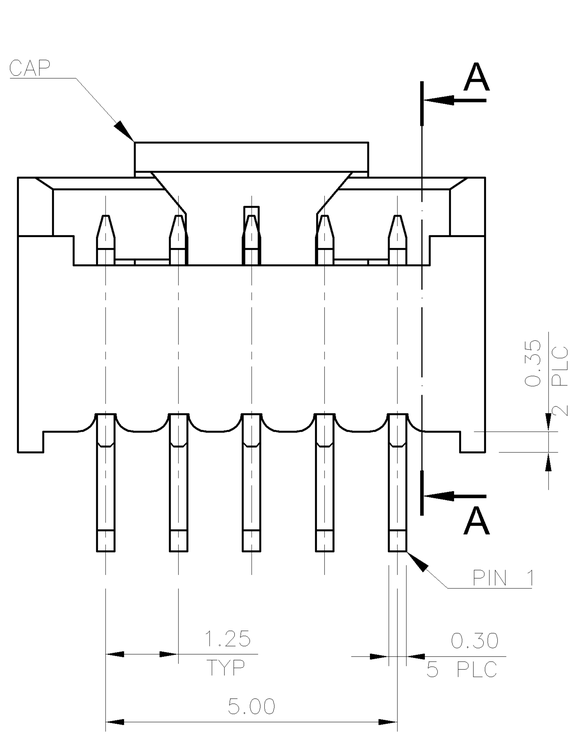

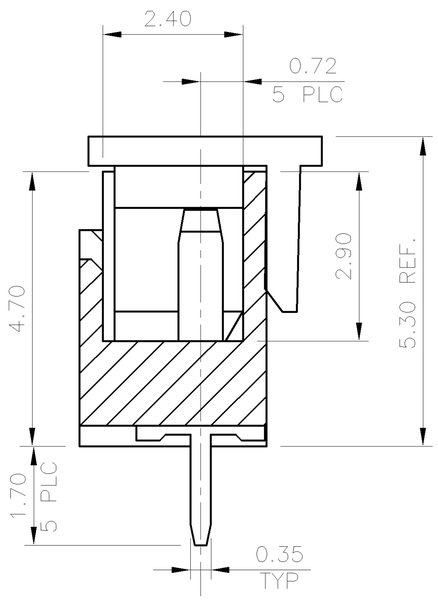

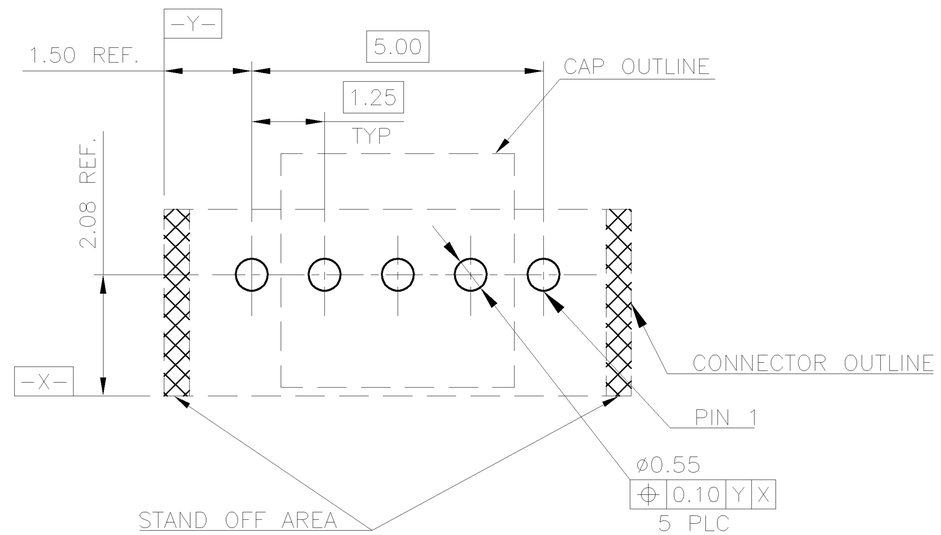

RECOMMENDED PCB LAYOUT (TOP VIEW)
TOLERANCE: ±0.05, THICKNESS: 1.2MM

TAPE & REEL	2041282–5
PACKAGE	PART NUMBER

THIS DRAWING IS A CONTROLLED DOCUMENT.

DIMENSIONS: MM

TOLERANCES UNLESS OTHERWISE SPECIFIED:

0 PLC	± –
1 PLC	± 0.3
2 PLC	± 0.2
3 PLC	± 0.15
4 PLC	± –
ANGLES	± 3°

MATERIAL: SEE NOTE

FINISH: SEE NOTE

DWN –
CHK –
APVD –
PRODUCT SPEC —
APPLICATION SPEC —
WEIGHT 0.18 GRAMS

TE Connectivity

NAME: 1.25 MM PITCH WIRE TO BOARD CONNECTOR, HEADER, DIP, VERTICAL, WITH CAP

SIZE	CAGE CODE	DRAWING NO	RESTRICTED TO
A3	00779	C–2041282	—

CUSTOMER DRAWING | SCALE — | SHEET 3 OF 4 | REV B

THIS DRAWING IS UNPUBLISHED. RELEASED FOR PUBLICATION AUG ,2006.
© COPYRIGHT – BY TYCO ELECTRONICS CORPORATION. ALL RIGHTS RESERVED.

LOC	DIST
DW	—

REVISIONS

P	LTR	DESCRIPTION	DATE	DWN	APVD
		SEE SHEET 1.			

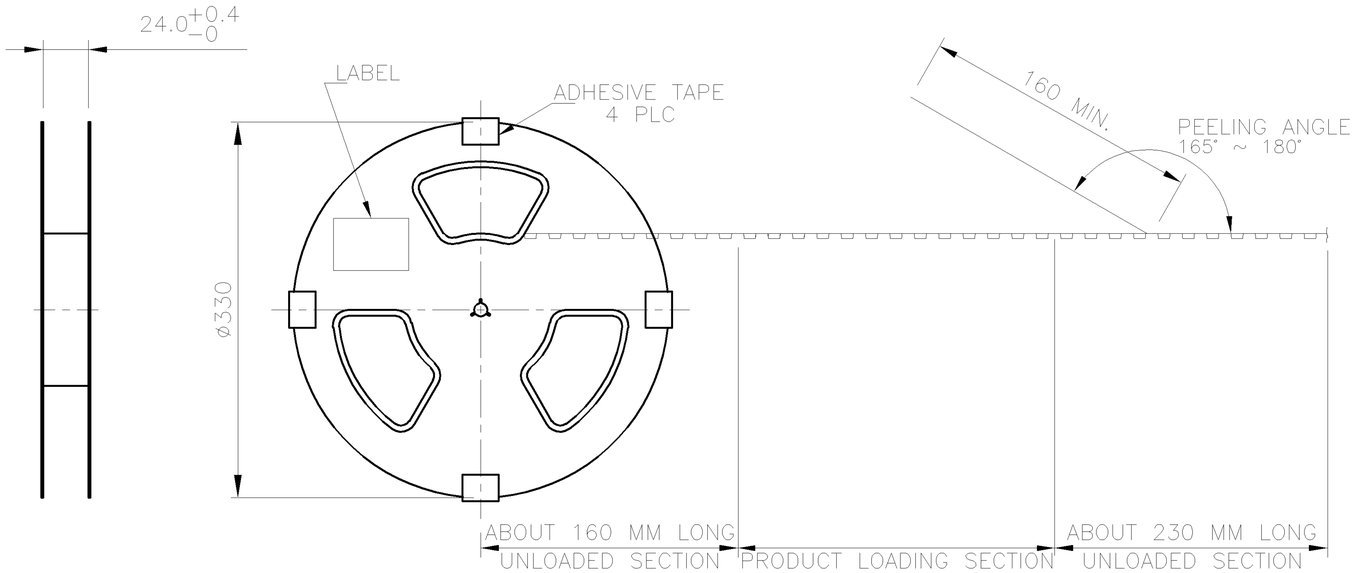

NOTE:
1. PEELING RESISTANCE: 10gf ~ 130gf.
2. PEELING SPEED: 300mm/MINUTES.

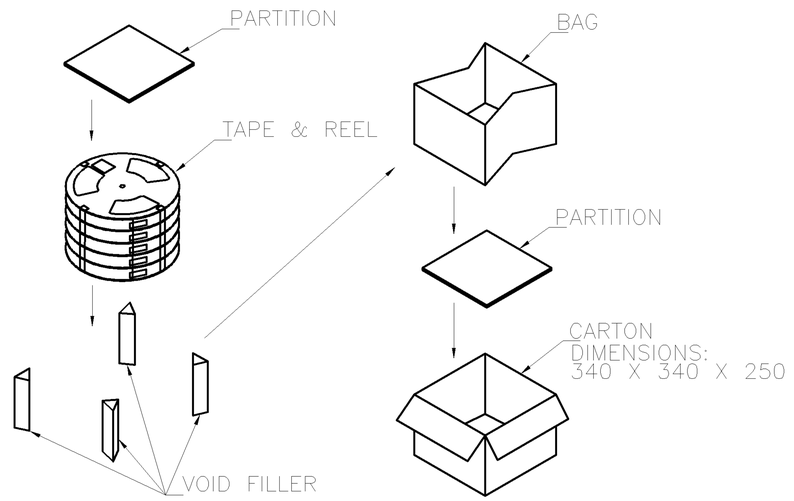

TOP OF TAPE

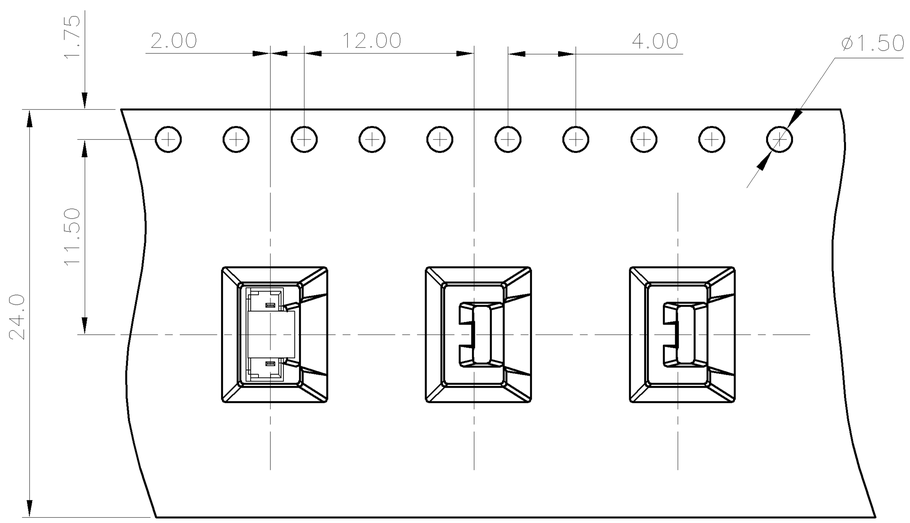

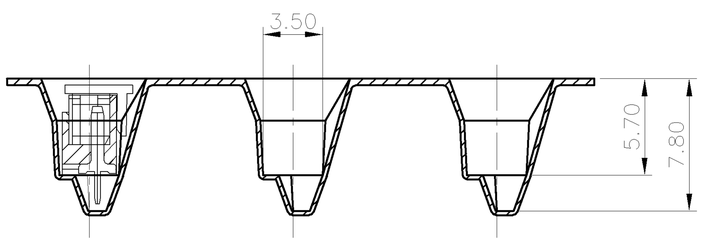

G/W (Kg)	N/W (Kg)	PCS/ TAPE	REELS/ BOX	QUANTITY (PCS)	NO. OF CONTACTS	PART NUMBER
5.09	0.88	700	7	4900	5	2041282-5
5.00	0.79	700	7	4900	4	2041282-4
4.00	0.59	700	7	4900	2	2041282-2

THIS DRAWING IS A CONTROLLED DOCUMENT.

DIMENSIONS: MM

TOLERANCES UNLESS OTHERWISE SPECIFIED:
0 PLC ± –
1 PLC ± –
2 PLC ± –
3 PLC ± –
4 PLC ± –
ANGLES ± –

MATERIAL –

FINISH –

DWN –
CHK –
APVD –
PRODUCT SPEC —
APPLICATION SPEC —
WEIGHT —

TE Connectivity

NAME
1.25 MM PITCH WIRE TO BOARD
CONNECTOR, HEADER, DIP, VERTICAL, WITH CAP

SIZE	CAGE CODE	DRAWING NO	RESTRICTED TO
A3	00779	C-2041282	—

CUSTOMER DRAWING | SCALE — | SHEET 4 OF 4 | REV B

单击下面可查看定价，库存，交付和生命周期等信息

>>TE Connectivity(泰科)

Downloaded From Oneyac.com