© – TE Connectivity. All Rights Reserved.

REVISIONS					
P	LTR	DESCRIPTION	DATE	DWN	APVD
	B	HOUSING RESIN CHANGED	25OCT2021	SCB	KJK

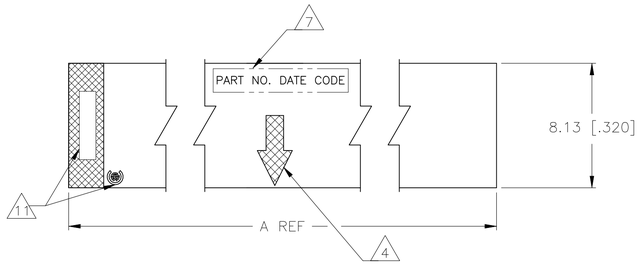

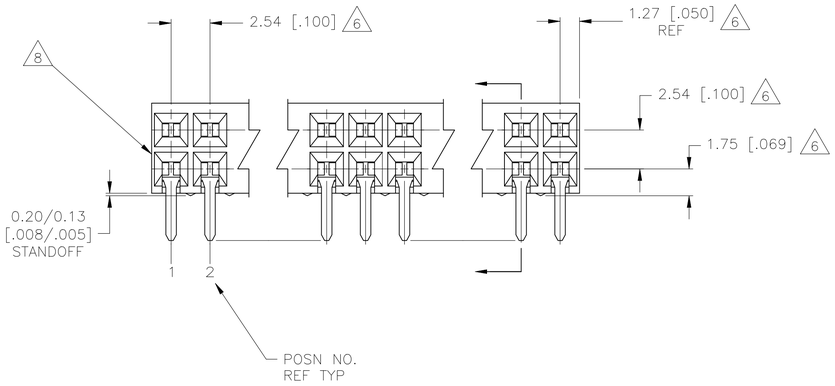

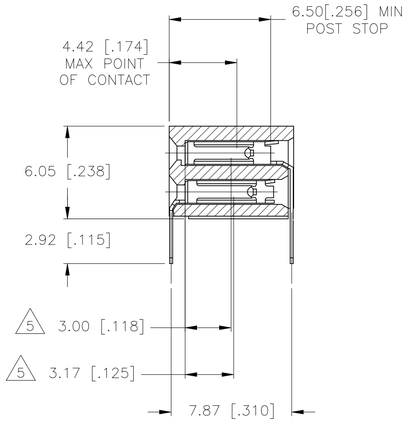

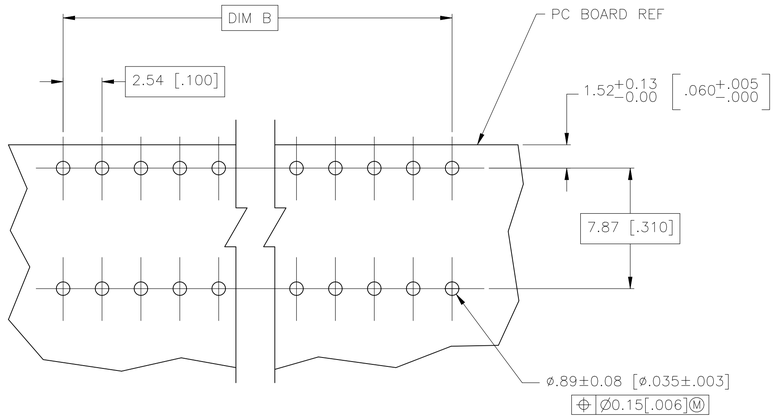

RECOMMENDED PC BOARD LAYOUT

9	2.54[.100]	5.08[.200]	4	8	6-5102084-4
9	5.08[.200]	7.62[.300]	6	8	6-5102084-3
9	7.62[.300]	10.16[.400]	8		6-5102084-2
9	10.16[.400]	12.70[.500]	10		6-5102084-1
	12.70[.500]	15.24[.600]	12		6-5102084-0
	15.24[.600]	17.78[.700]	14		5-5102084-9
	17.78[.700]	20.32[.800]	16		5-5102084-8
	17.78[.700]	22.86[.900]	18		5-5102084-7
	22.86[.900]	25.40[1.000]	20		5-5102084-6
	25.40[1.000]	27.94[1.100]	22		5-5102084-5
	27.94[1.100]	30.48[1.200]	24		5-5102084-4
	30.48[1.200]	33.02[1.300]	26		5-5102084-3
	33.02[1.300]	35.56[1.400]	28		5-5102084-2
	35.56[1.400]	38.10[1.500]	30		5-5102084-1
	38.10[1.500]	40.64[1.600]	32		5-5102084-0
	40.64[1.600]	43.18[1.700]	34		4-5102084-9
	43.18[1.700]	45.72[1.800]	36		4-5102084-8
	45.72[1.800]	48.26[1.900]	38		4-5102084-7
	48.26[1.900]	50.8[2.000]	40		4-5102084-6
	50.8[2.000]	53.34[2.100]	42		4-5102084-5
	53.34[2.100]	55.88[2.200]	44		4-5102084-4
	55.88[2.200]	58.42[2.300]	46		4-5102084-3
	58.42[2.300]	60.96[2.400]	48		4-5102084-2
	60.96[2.400]	63.50[2.500]	50		4-5102084-1
	63.50[2.500]	66.04[2.600]	52		4-5102084-0
	66.04[2.600]	68.58[2.700]	54		3-5102084-9
	68.58[2.700]	71.12[2.800]	56		3-5102084-8
	71.12[2.800]	73.66[2.900]	58		3-5102084-7
	73.66[2.900]	76.20[3.000]	60		3-5102084-6
	76.20[3.000]	78.74[3.100]	62		3-5102084-5
	78.74[3.100]	81.28[3.200]	64		3-5102084-4
	81.28[3.200]	83.82[3.300]	66		3-5102084-3
	83.82[3.300]	86.36[3.400]	68		3-5102084-2
	86.36[3.400]	88.90[3.500]	70		3-5102084-1
	88.90[3.500]	91.44[3.600]	72		3-5102084-0
	91.44[3.600]	93.98[3.700]	74		2-5102084-9
	93.98[3.700]	96.52[3.800]	76		2-5102084-8
	96.52[3.800]	99.06[3.900]	78		2-5102084-7
	99.06[3.900]	101.16[4.000]	80		2-5102084-6
	101.16[4.000]	104.14[4.100]	82		2-5102084-5
	104.14[4.100]	106.68[4.200]	84		2-5102084-4
	106.68[4.200]	109.22[4.300]	86		2-5102084-3
	109.22[4.300]	111.76[4.400]	88		2-5102084-2
	111.76[4.400]	114.30[4.500]	90		2-5102084-1
	114.30[4.500]	116.84[4.600]	92		2-5102084-0
	116.84[4.600]	119.38[4.700]	94		1-5102084-9
	119.38[4.700]	121.92[4.800]	96		1-5102084-8
	121.92[4.800]	124.46[4.900]	98		1-5102084-7
	124.46[4.900]	127.00[5.000]	100		1-5102084-6
	127.00[5.000]	129.54[5.100]	102		1-5102084-5
	129.54[5.100]	132.08[5.200]	104		1-5102084-4
	132.08[5.200]	134.62[5.300]	106		1-5102084-3
	134.62[5.300]	137.16[5.400]	108		1-5102084-2
	137.16[5.400]	139.70[5.500]	110		1-5102084-1
	139.70[5.500]	142.24[5.600]	112		1-5102084-0
	139.70[5.500]	144.78[5.700]	114		5102084-9
	144.78[5.700]	147.32[5.800]	116		5102084-8
	147.32[5.800]	149.86[5.900]	118		5102084-7
	149.86[5.900]	152.40[6.000]	120		5102084-6
	152.40[6.000]	154.94[6.100]	122		5102084-5
	154.94[6.100]	157.48[6.200]	124		5102084-4
	157.48[6.200]	160.02[6.300]	126		5102084-3
	160.02[6.300]	162.56[6.400]	128		5102084-2
	162.56[6.400]	165.10[6.500]	130		5102084-1
	B	A	NO. OF POSN		ASSEMBLY PART NUMBER

1. HOUSING MATERIAL: GLASS FILLED POLYESTER, COLOR– BLACK
2. CONTACT MATERIAL: PHOSPHOR BRONZE
3. CONTACT FINISH: 3.81–7.62(.000150–.000300) THK MATTE TIN ALL OVER 0.00127(.000050)MIN NICKEL, ENTIRE CONTACT.
4. MOLDED IN ARROW DESIGNATES THE MATING FACE OF THE CONNECTOR
5. POINT OF MEASUREMENT FOR PLATING THICKNESS OF CONTACT AREA
6. DIMENSIONS PERTAIN TO HOUSING CAVITY CENTERLINES
7. PART NUMBER AND DATE CODE MARKED IN APPROXIMATE LOCATION SHOWN,EITHER END.
8. ALTERNATE LOCATION FOR DATE CODE FOR 4 AND 6 POSITION.
9. NO PART NUMBER MARKING REQUIRED FOR THIS PART.
10. ROHS 2002/95/EC COMPLIANT.
11. TE LOGO AND CSA LOGO ARE MOLDED INTO HOUSING, THIS LOCATION.

THIS DRAWING IS A CONTROLLED DOCUMENT.

DIMENSIONS: mm

TOLERANCES UNLESS OTHERWISE SPECIFIED:
0 PLC ± –
1 PLC ± –
2 PLC ± –
3 PLC ± 0.13[.005]
4 PLC ± –
ANGLES ± –

MATERIAL 1 2
FINISH 3

DWN 03NOV04 RSV
CHK – J. OLSON
APVD – J. OLSON
PRODUCT SPEC —
APPLICATION SPEC —
WEIGHT —

TE Connectivity

NAME AMPMODU MOD II RECEPTACLE ASSEMBLY, HORIZONTAL, .100 CL, 2 ROW, CLOSED–ENTRY, SHORT POINT OF CONTACT, END–TO–END STACKABLE

SIZE	CAGE CODE	DRAWING NO	RESTRICTED TO
A1	00779	C-5102084	—

CUSTOMER DRAWING | SCALE 5:1 | SHEET 1 OF 1 | REV B

4805 (1/15)

Downloaded From Oneyac.com

单击下面可查看定价，库存，交付和生命周期等信息

>>TE Connectivity(泰科)

Downloaded From Oneyac.com