DRAWING MADE IN THIRD ANGLE PROJECTION
THIS DRAWING IS UNPUBLISHED. RELEASED FOR PUBLICATION ,19 .
© COPYRIGHT 19 BY AMP INCORPORATED. ALL INTERNATIONAL RIGHTS RESERVED.

LOC	DIST	P	F	REVISIONS				
				ZONE	LTR	DESCRIPTION	DATE	APPD
GP	00				F	REVISED PER EC 0513-0017-03	12MAY03	JG

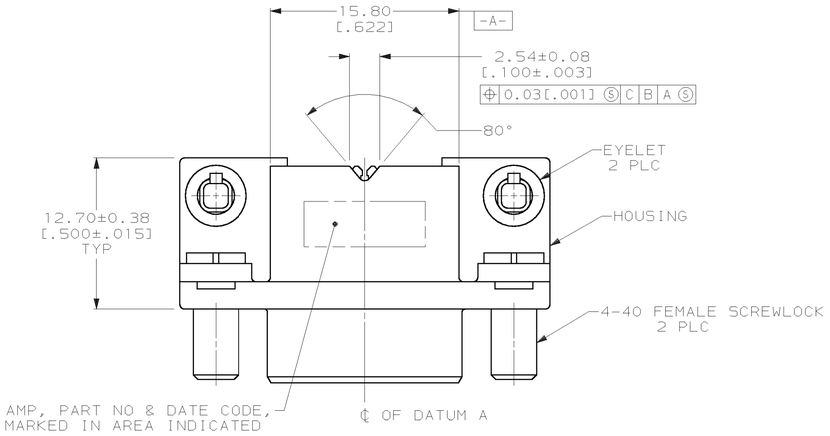

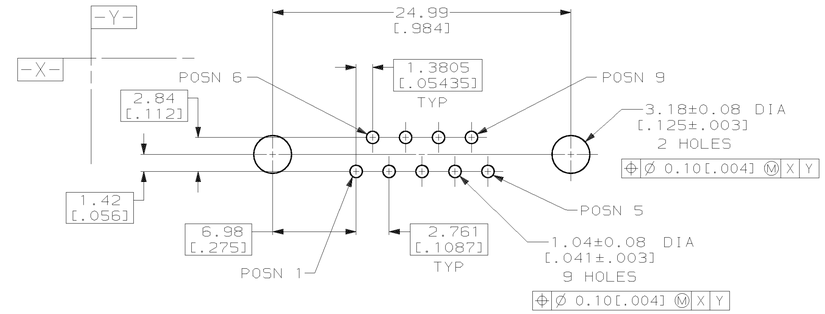

PC BOARD MOUNTING DIMENSIONS
(.062 PC BOARD THICKNESS)

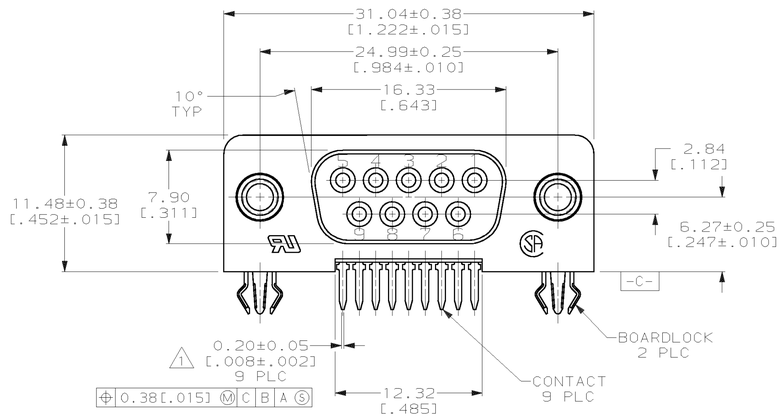

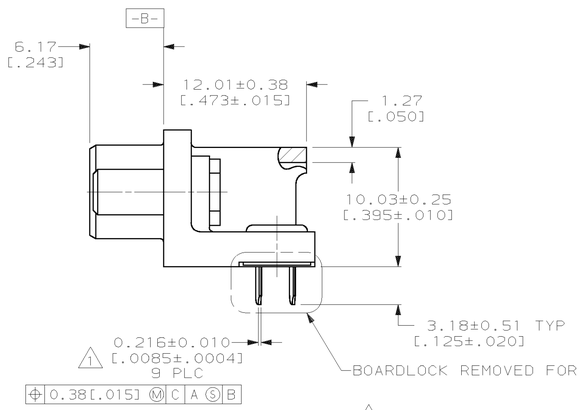

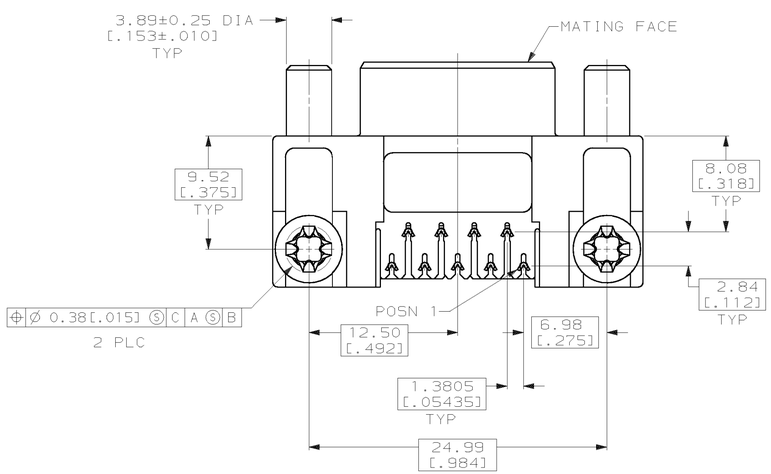

1. POSITION TOLERANCE APPLIES AT TIP ONLY.
2. NYLON OR POLYESTER, UL94V-0 RATED, BLACK.
3. PHOSPHOR BRONZE PER QQ-B-750.
4. EYELETS: BRASS; SCREWLOCKS: ZINC; BOARDLOCKS: COPPER ALLOY.
5. GOLD PLATING PER MIL-G-45204, NICKEL PLATING PER QQ-N-290, TIN PLATING PER MIL-T-10727.
6. EYELETS: 5.08 µm [.000200] MIN TIN OVER COPPER FLASH; BOARDLOCKS: 5.08 µm [.000200] MIN TIN-LEAD OVER 1.27 µm [.000050] MIN NICKEL.
7. 0.76 µm [.000030] MIN GOLD FOR A LENGTH OF 1.52 [.060] MIN FROM MATING END, 3.05 µm [.000120] MIN TIN-LEAD FOR A LENGTH OF 3.68 [.145] MIN FROM OPPOSITE END, BOTH OVER 1.27 µm [.000050] MIN NICKEL.
8. GOLD FLASH FOR A LENGTH OF 1.52 [.060] MIN FROM MATING END, 3.05 µm [.000120] MIN TIN-LEAD FOR A LENGTH OF 3.68 [.145] MIN FROM OPPOSITE END, BOTH OVER 1.27 µm [.000050] MIN NICKEL.
9. 0.25 µm [.000010] MIN GOLD FOR A LENGTH OF 1.52 [.060] MIN FROM MATING END, 3.05 µm [.000120] MIN TIN-LEAD FOR A LENGTH OF 3.68 [.145] MIN FROM OPPOSITE END, BOTH OVER 1.27 µm [.000050] MIN NICKEL.

	CONTACT FINISH	PART NO
OBSOLETE	9	748979-3
OBSOLETE	8	748979-2
	7	748979-1

DO NOT SCALE PRINT.
UNLESS SPECIFIED
DIMENSIONS IN mm [INCHES]
TOLERANCES ON :
2 PLC DEC ± 0.13 [.005]
3 PLC DEC ± -
ANGLES ± 2°

MATERIAL
HOUSING: 2
CONTACTS: 3
HARDWARE: 4

FINISH 5 HARDWARE: 6
CONTACTS: SEE TABLE
SCREWLOCKS: CLEAR CHROMATE

DR 08/03/89 S.WELDON
CHK 8/29/89 R.STONE
APPD 9/18/89 W.SWAIN
APPD 9/18/89 C.ROHDE

PRODUCT SPEC 108-1226
APPLICATION SPEC 114-40027
WEIGHT _

AMP INCORPORATED
Harrisburg, Pa. 17105

NAME
RECEPTACLE ASSEMBLY, SIZE 1, 9 POSN, ALL PLASTIC, RIGHT ANGLE, .318 SERIES, AMPLIMITE® III

SIZE D | CAGE CODE 00779 | DRAWING NO 748979
SCALE 4:1 | SHEET 1 OF 1

CUSTOMER DRAWING

Downloaded From Oneyac.com

单击下面可查看定价，库存，交付和生命周期等信息

>>TE Connectivity(泰科)

Downloaded From Oneyac.com