THIS DRAWING IS UNPUBLISHED. RELEASED FOR PUBLICATION -,- .
© COPYRIGHT - BY TYCO ELECTRONICS CORPORATION. ALL RIGHTS RESERVED.

LOC	DIST
—	—

REVISIONS

P	LTR	DESCRIPTION	DATE	DWN	APVD
	B	REV PER ECO-07-004569	08MAR07	PY	ND

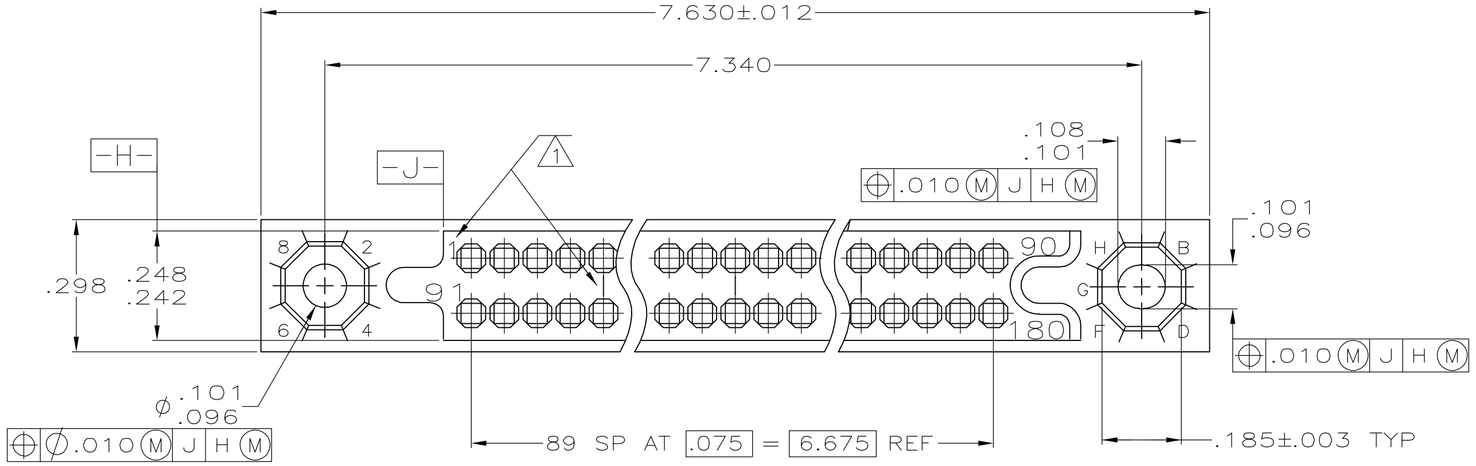

1. NUMBERS & LINES INDICATING EVERY FIVE CAVITIES MARKED ON MATING FACE.
2. CONNECTOR MEETS ALL APPLICABLE REQUIREMRNTS OF MIL-C-55302.
3. NUMBERS INDICATING EVERY FIVE CAVITIES MARKED ON THIS SIDE.
4. FINISH: PLATED GOLD .000050 THK IN CONTACT AREA. TAIL PLATED TIN-LEAD .000100 THK, ALL OVER NICKEL .000030 THK.
5. MAX DEPTH OF CONTACT POINT.
6. AMP, PART NO., & DATE CODE MARKED IN THIS AREA.

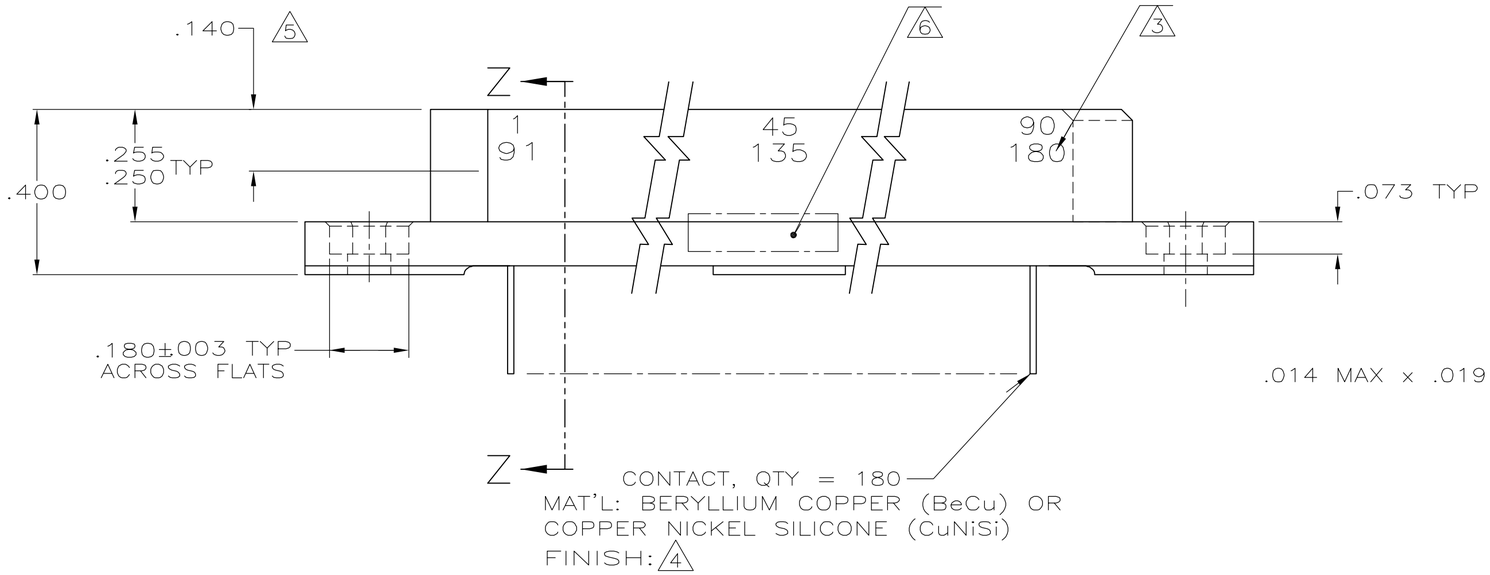

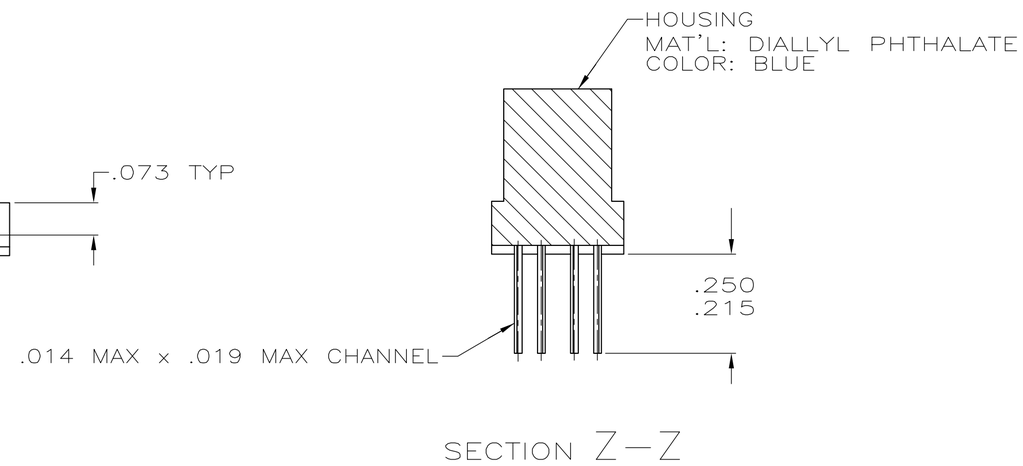

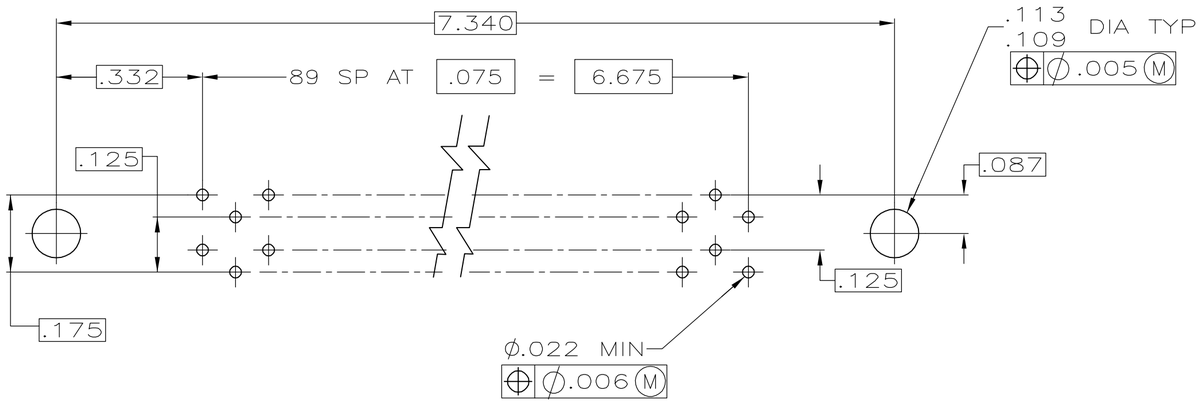

RECOMMENDED P.C. BOARD LAYOUT
(CONNECTOR SIDE)

445696

445696-1
PART NO.

THIS DRAWING IS A CONTROLLED DOCUMENT.

DIMENSIONS: INCHES

TOLERANCES UNLESS OTHERWISE SPECIFIED:
0 PLC ± -
1 PLC ± -
2 PLC ± -
3 PLC ± .005
4 PLC ± -
ANGLES ± -

MATERIAL: SEE CALLOUTS
FINISH: SEE CALLOUTS

DWN C.C.THOMAS 11-3-88
CHK J.P.SCHOLZ 11-4-88
APVD J.P.SCHOLZ 11-4-88
PRODUCT SPEC —
APPLICATION SPEC —
WEIGHT —

CUSTOMER DRAWING

tyco Electronics
Tyco Electronics Corporation
Harrisburg, PA 17105-3608

NAME
RECEPTACLE ASSY, 750
SERIES BOX, FLOW SOLDER CONTACTS,
50 AU DUPLEX

SIZE	CAGE CODE	DRAWING NO	RESTRICTED TO
A2	00779	C-445696	—

SCALE 2:1 SHEET 1 OF 1 REV B

AMP 1471-9 REV 31MAR2000

Downloaded From Oneyac.com

单击下面可查看定价，库存，交付和生命周期等信息

>>TE Connectivity(泰科)

Downloaded From Oneyac.com