THIS DRAWING IS UNPUBLISHED. RELEASED FOR PUBLICATION 20
© COPYRIGHT 20 BY - ALL RIGHTS RESERVED.

KEYING OPTIONS (2:1)

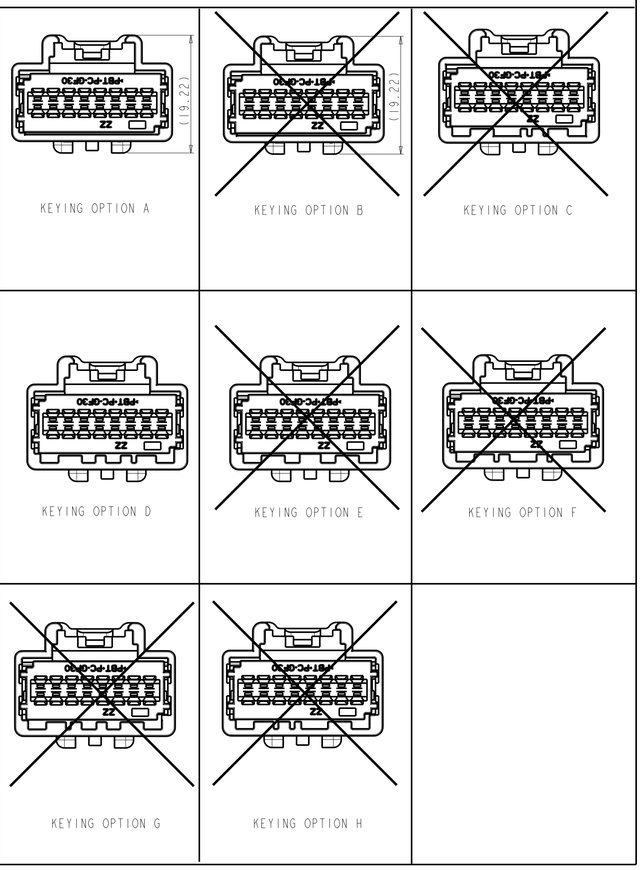

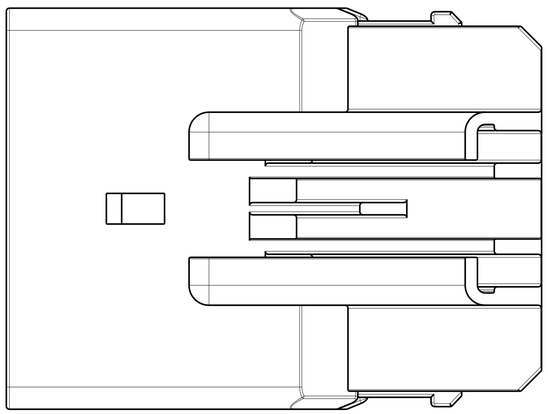

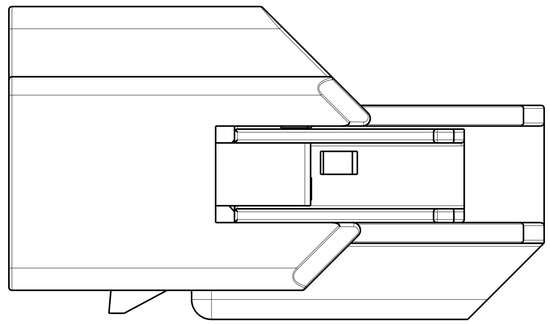

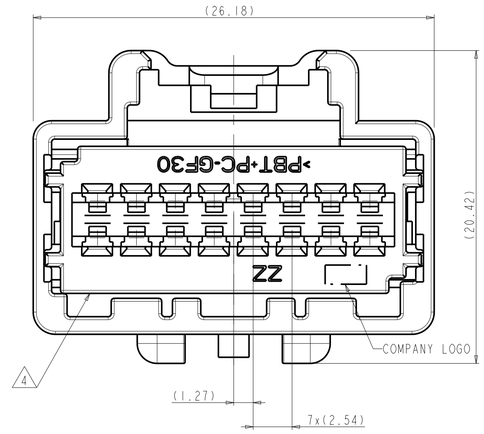

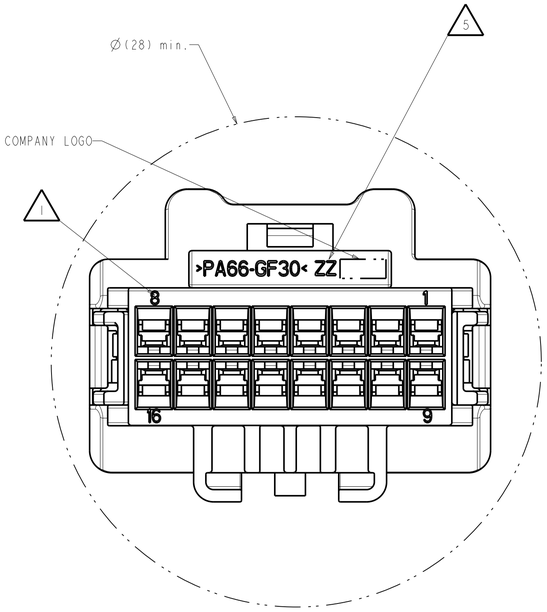

WORST CASE FEED CODITION

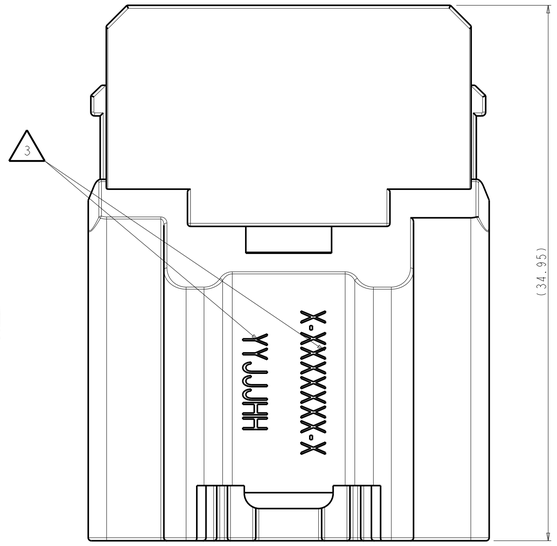

SHOWING MATING COMPONENTS
(FOR REFERENCE ONLY)

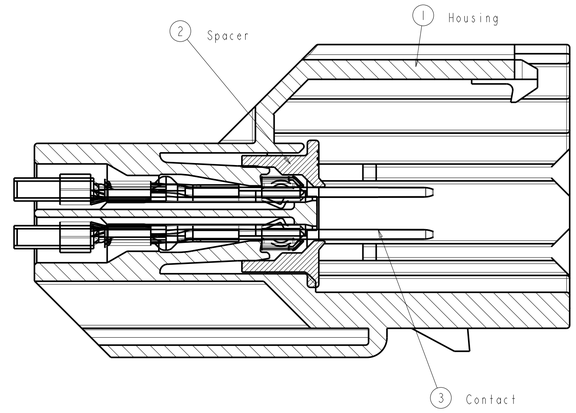

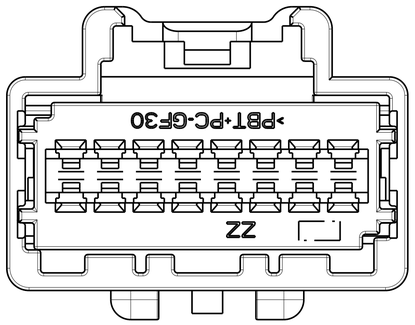

CODING F SHOWN

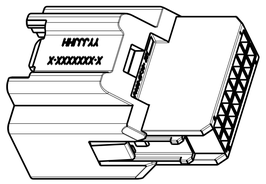

2:1

1. TERMINAL POSITION NUMBERS
2. SPACER SHIP IN PRE ASSEMBLED POSITION
3. PART NUMBER AND DATE CODE
4. TPA CAN BE SHIPPED IN THIS POSITION OR ROTATED 180°.
5. CAVITY NUMBER
6. PACKING: CONNECTOR ASSEMBLIES BULK PACKED IN CARDBOARD BOX

KEYING OPTIONS									TYCO ASSEMBLY NUMBER			
A	A	B	C	D	E	F	G	H				
6-1419167-1	1411367-1	6-1419167-2	5-1419167-5	5-1419167-6	5-1419167-7	5-1419167-8	5-1419167-9	6-1419167-0				
1	1	1	1	1	1	1	1	1	2	SPACER	PBT+PC-GF30	RED
								1	1	MALE HOUSING KEY H	PA66-GF35	BLACK
							1		1	MALE HOUSING KEY G	-	BLACK
						1			1	MALE HOUSING KEY F	-	BLACK
					1				1	MALE HOUSING KEY E	-	BLACK
				1					1	MALE HOUSING KEY D	-	BLACK
			1						1	MALE HOUSING KEY C	-	BLACK
		1							1	MALE HOUSING KEY B	-	BLACK
	1								1	MALE HOUSING KEY A	-	LIGHT GREY
1									1	MALE HOUSING KEY A	-	BLACK
KEYING OPTIONS									ITEM	DESCRIPTION	MATERIAL	COLOUR

REVISIONS					
P	LTR	DESCRIPTION	DATE	DWN	APVD
	D1	REV PER ECR-10-012906	24JUN2010	VSS	DZ
	D2	REVISED PER ECO-14-008755	11JUN2014	DD	RL

THIS DRAWING IS A CONTROLLED DOCUMENT.

DIMENSIONS: mm

TOLERANCES UNLESS OTHERWISE SPECIFIED:
0 PLC ± 0.1
1 PLC ± 0.1
2 PLC ± 0.1
3 PLC ± 0.1
4 PLC ± 0.1
ANGLES ±

MATERIAL - -
FINISH - -

DWN K STUBBE 20JUN2002
CHK G STEINBACH 20JUN2002
APVD -
PRODUCT SPEC -
APPLICATION SPEC -
WEIGHT -

TE Connectivity

NAME 2X8 POSITION, GET MALE CONNECTOR UNSEALED; ASSEMBLY

SIZE	CAGE CODE	DRAWING NO	RESTRICTED TO
A1	00779	C-5-1419167-5	-

CUSTOMER DRAWING | SCALE 5:1 | SHEET 1 OF 1 | REV D2

4805 (3/13)

Downloaded From Oneyac.com

单击下面可查看定价，库存，交付和生命周期等信息

>>TE Connectivity(泰科)

Downloaded From Oneyac.com