DRAWING MADE IN AMERICAN PROJECTION

NUMBER C-165305-E

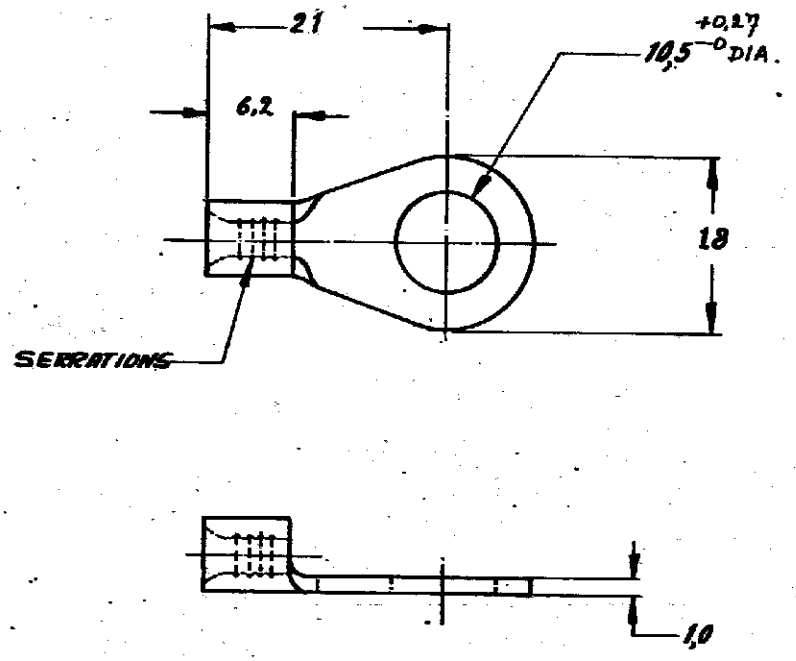

165305	COPPER	TIN PLATED
ORDER NO.	MATERIAL	PLATING

DR R. BRONDT. 23/6-67 DATE | DR L.C.J. Geurts 25/10/67 DATE
CHK DATE | APP 15/12-67 DATE

DIMENSIONS IN M.M. DO NOT SCALE PRINT

AMP 1282

CUSTOMER COPY FOR REFERENCE ONLY

©1967 BY AMP-HOLLAND N.V. ALL RIGHTS RESERVED A-MP PRODUCTS COVERED BY PATENTS AND/OR PATENTS PENDING.

AMP-HOLLAND N.V.
'S-HERTOGENBOSCH HOLLAND

WIRE-RANGE	INSUL-RANGE	TYPE	SCALE	LOC	SIZE	NO	REV
4-6 mm²	—//—	– DIN – SOLISTBAND	—//—	H	A	C-165305-E	C

NAME RINGTONGUE stud: M 10

Downloaded From Oneyac.com

单击下面可查看定价，库存，交付和生命周期等信息

>>TE Connectivity(泰科)

Downloaded From Oneyac.com