THIS DRAWING IS UNPUBLISHED. RELEASED FOR PUBLICATION -,- .
© COPYRIGHT - BY TYCO ELECTRONICS CORPORATION. ALL RIGHTS RESERVED.

LOC	DIST
AD	00

REVISIONS

P	LTR	DESCRIPTION	DATE	DWN	APVD
	A2	ECO-07-027490	21DEC2007	RB	JO

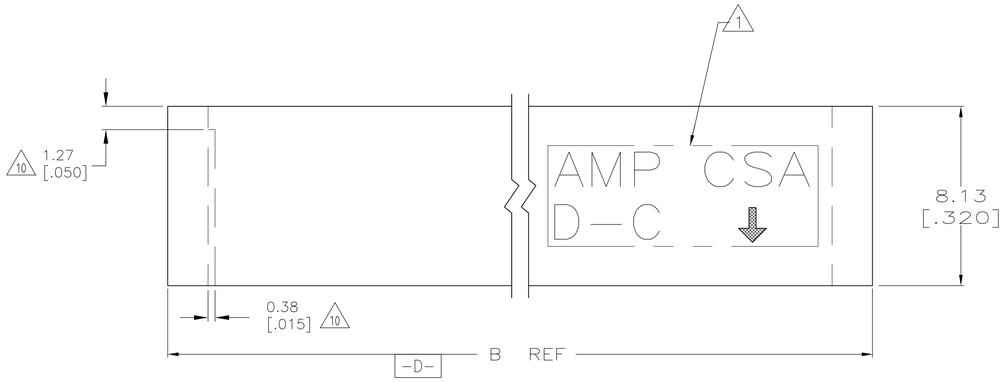

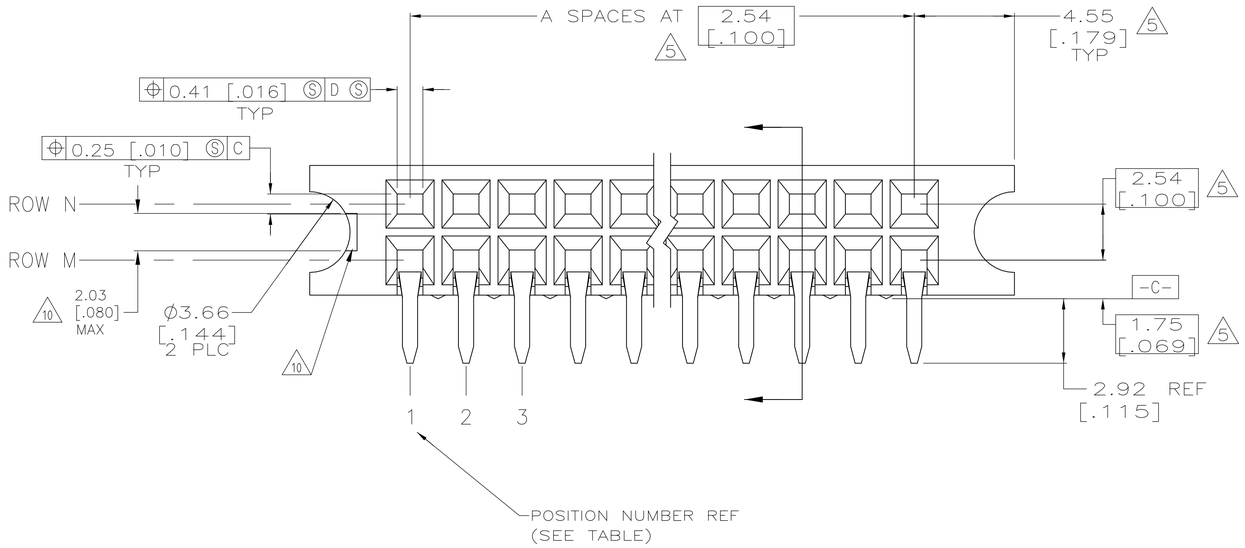

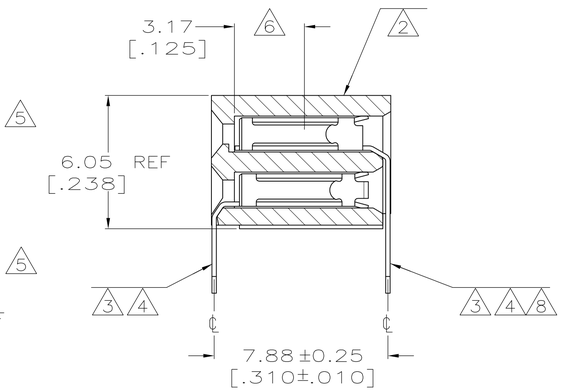

1. "AMP", "CSA", "⬇", AND "DATE CODE" WITH .062 ±.015 HIGH CHARACTERS WHERE SIZE PERMITS.
2. HOUSING: 1–70 POSITION SIZES MAY BE PPS, GLASS–FILLED OR PCT, GLASS–FILLED.
3. CONTACT: PHOSPHOR BRONZE.
4. CONTACT FINISH: DUPLEX PLATED 0.00076 [.000030] GOLD IN CONTACT AREA, 0.00127–0.00254 [.000050–.000100] BRIGHT TIN–LEAD ON SOLDER TAILS, ALL OVER 0.00127 [.000050] NICKEL.
5. THESE DIMENSIONS PERTAIN TO CAVITY ℄'S ONLY, NOT TO CONTACT LOCATIONS.
6. POINT OF MEASUREMENT FOR PLATING THICKNESS (INSIDE CONTACT BEAMS).
7. CSA LOGO INK STAMPED WHITE ON HOUSING.
8. CONTACT FINISH: DUPLEX PLATED 0.00076 [.000030] GOLD IN CONTACT AREA, 0.00127–0.00254 [.000050–.000100] MATTE TIN ON SOLDER TAILS, ALL OVER 0.00127 [.000050] NICKEL.
9. ROHS 2002/95/EC COMPLIANT.
10. RECESSED AREA AROUND MOLD GATE IS OPTIONAL. THIS FEATURE IS ALLOWABLE ON EITHER SIDE OF HOUSING OR MAY NOT BE PRESENT AT ALL.

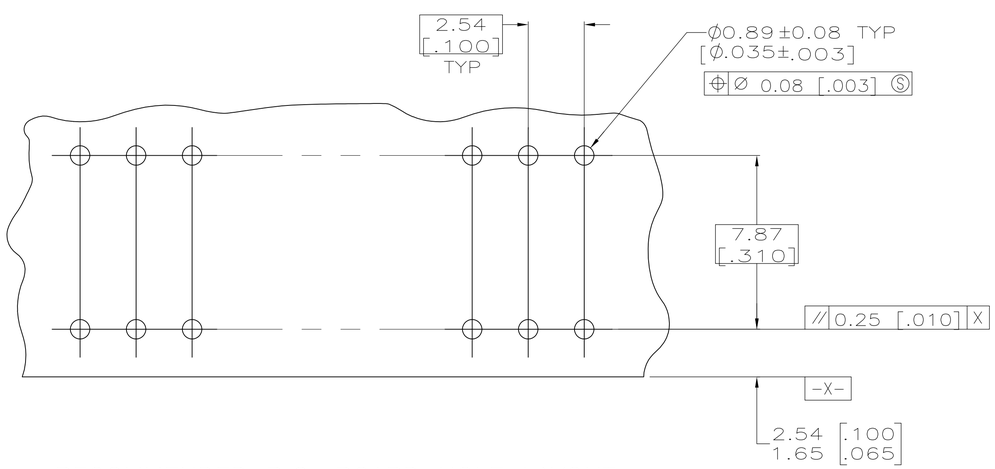

RECOMMENDED P.C. BOARD HOLE LAYOUT

–	1	8	21.79 [.858]	5	11/12	9 5–147055–1
–	1	4	21.79 [.858]	5	11/12	147055–1
ROW M	ROW N	FINISH	B	A	NO OF POSN	PART NUMBER
CONTACTS	OMITTED					

THIS DRAWING IS A CONTROLLED DOCUMENT.

DIMENSIONS: mm

TOLERANCES UNLESS OTHERWISE SPECIFIED:
0 PLC ± –
1 PLC ± –
2 PLC ± 0.13[.005]
3 PLC ± –
4 PLC ± –
ANGLES ± –

MATERIAL
HOUSING: 2
CONTACT: 3

FINISH
SEE TABLE

DWN E. BRANDBERG 16–NOV–97
CHK J. GESFORD 16–NOV–97
APVD J. GESFORD 16–NOV–97

PRODUCT SPEC —
APPLICATION SPEC —
WEIGHT —

CUSTOMER DRAWING

Tyco Electronics
Tyco Electronics Corporation
Harrisburg, PA 17105–3608

NAME
RECEPTACLE ASSY, MOD II, DBL ROW, 2.54 x 2.54 [.100 x .100] CENTERLINE, GUIDE PIN EARS, CLOSED ENTRY,

SIZE	CAGE CODE	DRAWING NO	RESTRICTED TO
A1	00779	C-147055	—

SCALE 6:1 SHEET 1 OF 1 REV A2

Downloaded From Oneyac.com

单击下面可查看定价，库存，交付和生命周期等信息

>>TE Connectivity(泰科)

Downloaded From Oneyac.com