THIS DRAWING IS UNPUBLISHED. RELEASED FOR PUBLICATION ,19 .
© COPYRIGHT 19 BY AMP INCORPORATED. ALL RIGHTS RESERVED.

LOC	DIST
DF	F0

REVISIONS

P	LTR	DESCRIPTION	DATE	DWN	APVD
	C	REV & REDRAWN;0600-4803-95	4-96	CT	DM
	D	REV PER 0600-5641-96 TT	09-97		DM

1. AMP,DATE CODE AND AMP PART NO. MARKED THIS APPROX AREA.
2. NUMBERS (SEE TABLE) INDICATING END CAVITIES MARKED ON MATING FACE. NUMBERS INDICATING EVERY 5 CAVITIES MARKED ON SIDE.
3. KEY POSITION IDENTIFICATION MOLDED ON SURFACE SHOWN.
4. PART HAS BEEN SEALED WITH AN EPOXY SEALANT.

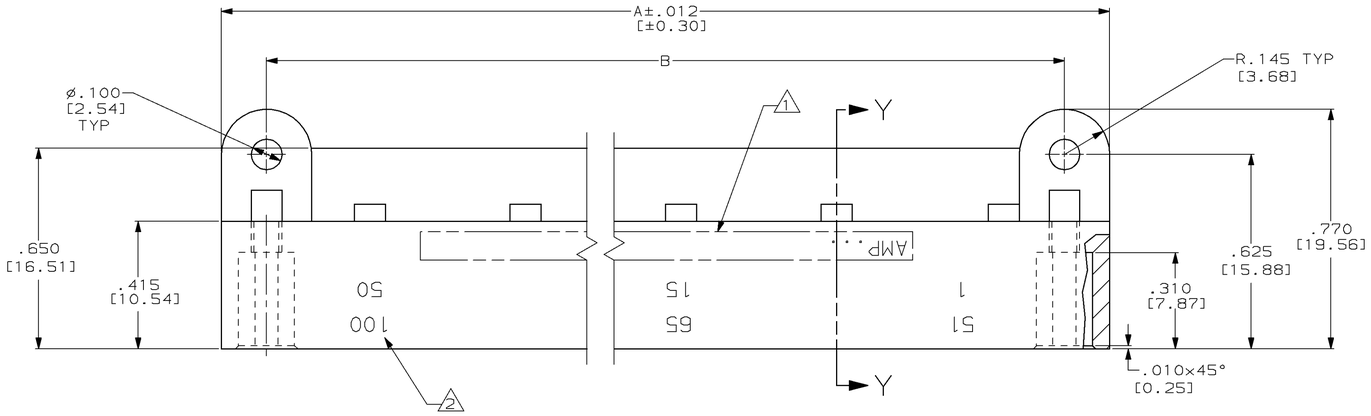

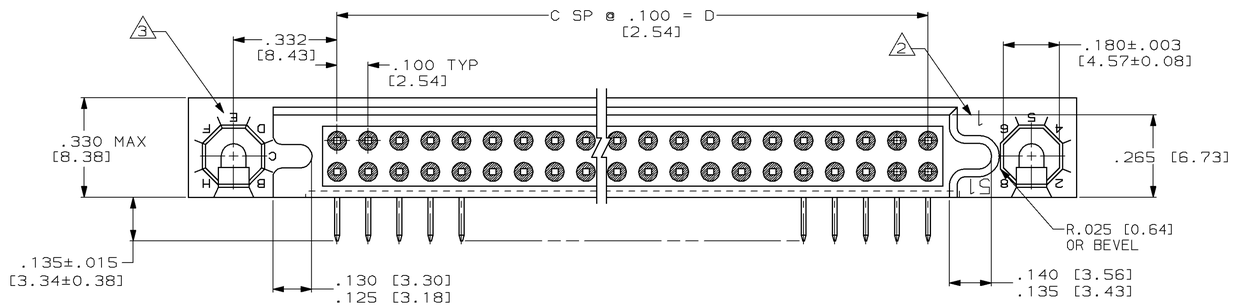

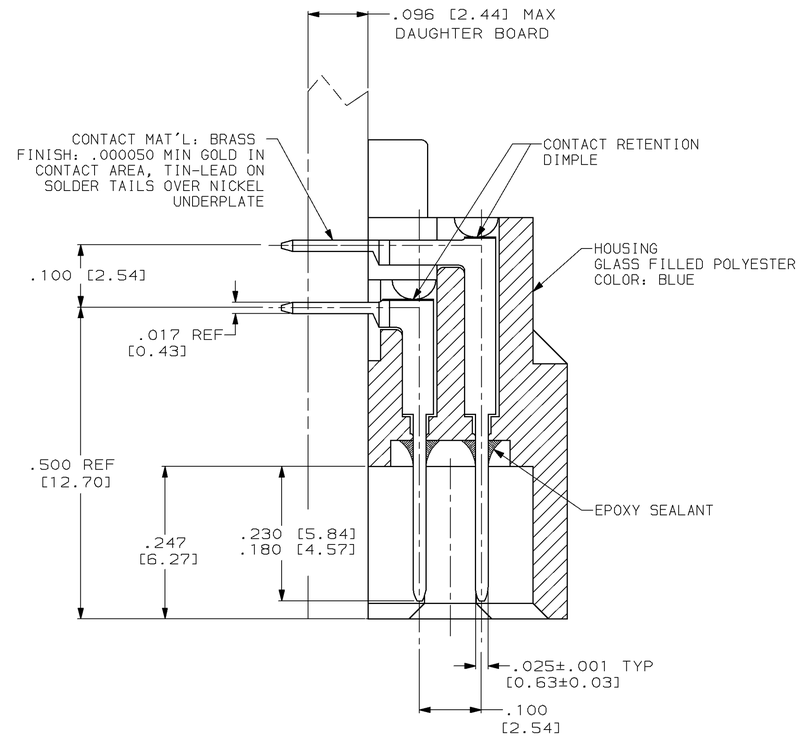

SECTION Y-Y
SCALE 8:1

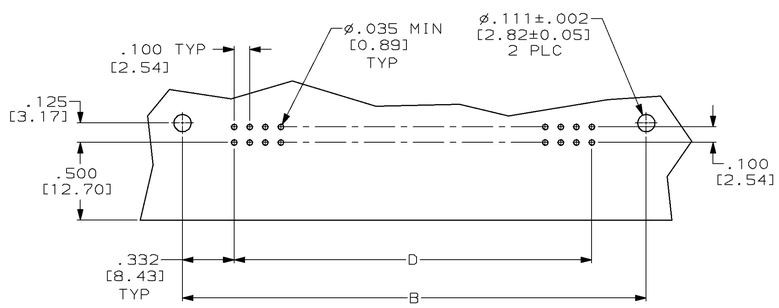

RECOMMENDED P.C. BOARD LAYOUT
SCALE 2:1

	CAVITY IDENT	D	C	B	A	NO OF POSN	PART NUMBER
OBSOLETE	1 71	6.900 [175.26]	69	7.565 [192.15]	7.855 [199.52]	140	1-532795-3
OBSOLETE	1 68	6.600 [167.64]	66	7.265 [184.53]	7.555 [191.90]	134	1-532795-2
	1 66	6.400 [162.56]	64	7.065 [179.45]	7.355 [186.82]	130	1-532795-1
OBSOLETE	1 61	5.900 [149.86]	59	6.565 [141.35]	6.855 [174.12]	120	1-532795-0
OBSOLETE	1 51	4.900 [124.46]	49	5.565 [141.35]	5.855 [148.72]	100	532795-9
	1 46	4.400 [111.76]	44	5.065 [128.65]	5.355 [136.02]	90	532795-8
OBSOLETE	1 41	3.900 [99.06]	39	4.565 [115.95]	4.855 [123.32]	80	532795-7
OBSOLETE	1 36	3.400 [86.36]	34	4.065 [103.25]	4.355 [110.62]	70	532795-6
OBSOLETE	1 31	2.900 [73.66]	29	3.565 [90.55]	3.855 [97.92]	60	532795-5
	1 16	1.400 [35.56]	14	2.065 [52.45]	2.355 [59.82]	30	532795-4
	1 56	5.400 [137.16]	54	6.065 [154.05]	6.355 [161.42]	110	532795-3
OBSOLETE	1 26	2.400 [60.96]	24	3.065 [77.85]	3.355 [85.22]	50	532795-2
OBSOLETE	1 21	1.900 [48.26]	19	2.565 [65.15]	2.855 [72.51]	40	532795-1

THIS DRAWING IS A CONTROLLED DOCUMENT.

DIMENSIONS: INCHES [mm]

TOLERANCES UNLESS OTHERWISE SPECIFIED:
0 PLC ±-
1 PLC ±-
2 PLC ±-
3 PLC ±.010 [0.25]
4 PLC ±-
ANGLES ±-

MATERIAL: SEE CALLOUTS
FINISH: SEE CALLOUTS

DWN C.C.THOMAS 4-24-96
CHK D.MILLER 4-29-96
APVD D.MILLER 4-29-96
PRODUCT SPEC —
APPLICATION SPEC —
WEIGHT —

AMP
AMP Incorporated
Harrisburg, PA 17105-3608

NAME
BOX PIN HDR ASSY,RT ANGLE
.100x.100¢. 1001 SERIES, SEALED

SIZE A1 | CAGE CODE 00779 | DRAWING NO C-532795

CUSTOMER DRAWING | SCALE 4:1 | SHEET 1 OF 1 | REV D

AMP 480S REV 23FEB95

Downloaded From: Oneyac.com

23-SEP-97 10:35:14 amp37315 /home/amp37315/edmmod

单击下面可查看定价，库存，交付和生命周期等信息

>>TE Connectivity(泰科)

Downloaded From Oneyac.com