THIS DRAWING IS A CONTROLLED DOCUMENT.

DWG NO 1054425-1

USED ON

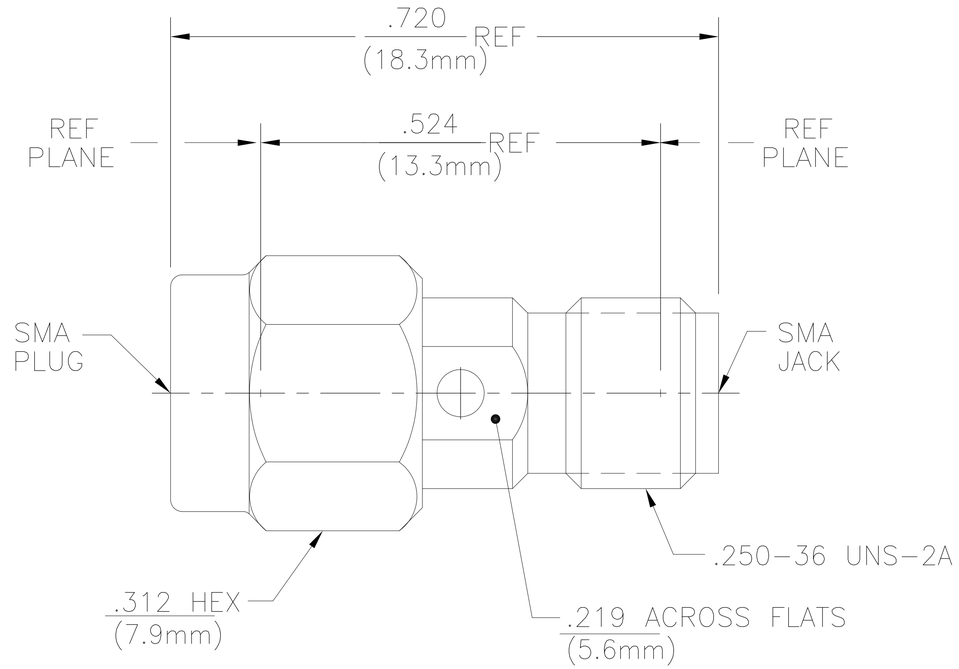

1054425-1
PART NUMBER

ELECTRICAL	
Nominal Impedance (Ohms)	50
Frequency Range (GHz) DC to 18	
Volt Rating (VRMS MAX)	
@ Sea Level	335
VSWR	1.05 + .005f(GHz)
Insertion Loss (dB MAX)	.03 $\sqrt{f(GHz)}$
RF Leakage (dB MIN)	[−60−f(GHz)]
Corona, 70,000 Ft (VRMS MIN)	250
Dielectric Withstanding Voltage	
(VRMS MIN) @ Sea Level	1500
Contact Resistance (Milliohms MAX)	
Center Contact	4.0
Outer Contact	2.0
Cable to Housing	N/A
RF High Potential @ Sea Level	
(VRMS MIN @ 5 MHz)	670
I.R.(Megohms MIN)	5,000

MECHANICAL	
Interface Dimensions MIL-STD-348A	
Fig. 310.1 & 310.2	
Recommended Mating	
Torque	7-10 in-Lb
Mating Characteristics:	
Insertion (MAX Lbs)	3
Withdrawal (MIN Oz)	1
Force to Engage and	
Disengage (In-Lbs MAX)	2
Center Contact Captivation	
Axial (Lbs)	6
Radial (In-Oz)	4
Coupling Proof Torque (In-Lbs MIN)	15
Coupling Mechanism Retention	
Force (Lbs MIN)	60
Weight (Grams)	TBD

ENVIRONMENTAL
TEMPERATURE RATING −65°C TO 125°C
Vibration MIL-STD-202, Method 204, Condition D
Shock MIL-STD-202, Method 213, Condition I
Thermal Shock MIL-STD-202, Method 107, Condition B, EXCEPT HIGH TEMP SHALL BE +155°C
Moisture Resistance MIL-STD-202, Method 106
Corrosion − MIL-STD-202, Method 101, Condition B, 5% salt spray

COMPONENT	MATERIAL	FINISH
HOUSING COUPLING NUT	STAINLESS STEEL	GOLD PLATE PER OVER NICKEL PLATE
DIELECTRIC	PTFE	N/A
CENTER CONTACT	BERYLLIUM COPPER	GOLD PLATE .00005 IN MIN OVER NICKEL PLATE .00005 IN MIN OVER COPPER PLATE .00001 IN MIN
RETAINING RING	BERYLLIUM COPPER	N/A
GASKET	SILICONE RUBBER	N/A

P	LTR	REVISION RECORD	DATE	DWN	APVD
	B	REV PER ECO 08-027674	11/11/2008	DW	JO

DIMENSIONS: INCHES

TOLERANCES UNLESS OTHERWISE SPECIFIED:
0 PLC ± –
1 PLC ± –
2 PLC ± –
3 PLC ± .005
4 PLC ± –
ANGLES ± –
SURFACE TEXTURE √

DWN R.B.G	8/10/76	MATERIAL – –	HEAT TREAT – –
CHK R.M.F	8/11/76	Tyco Electronics	Tyco Electronics Corporation Harrisburg, PA 17105-3608
APVD RB	8/27/76		
NAME	SMA JACK TO PLUG ADAPTER (2082-5133-00)		
SCALE 10:1	SIZE A1	DRAWING NO 1054425-1	SHEET 1 OF 1 REV B

THIS INFORMATION IS CONFIDENTIAL AND PROPRIETARY TO TYCO ELECTRONICS CORPORATION AND ITS WORLDWIDE SUBSIDIARIES AND AFFILIATES. IT MAY NOT BE DISCLOSED TO ANYONE OUTSIDE AUTHORIZED COMPANIES WITHOUT WRITTEN AUTHORIZATION FROM TYCO ELECTRONICS CORPORATION, HARRISBURG, PENNSYLVANIA USA.

LOC AJ
DIST 00
3308-8 (1/08)

Downloaded From Oneyac.com

单击下面可查看定价，库存，交付和生命周期等信息

>>TE Connectivity(泰科)

Downloaded From Oneyac.com