THIS DRAWING IS UNPUBLISHED. RELEASED FOR PUBLICATION 20
© COPYRIGHT 20 BY - ALL RIGHTS RESERVED.

LOC	DIST
IN	00

REVISIONS

P	LTR	DESCRIPTION	DATE	DWN	APVD
	2	REV PER ECO-12-003474	23FEB2012	MBH	RH
	3	REV PER ECO-12-004619	08MAR2012	MBH	RH
	A	REV PER ECO-13-005117	28MAR2013	VP	RH
	A1	REVISED PER ECO-20-012096	27AUG2020	CN	HC

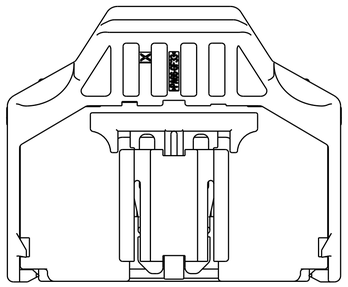

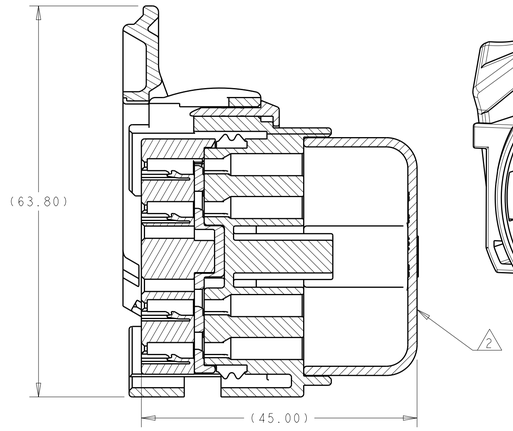

SECTION D-D
LEVER, ISL, & CPA
SHOWN IN ASSEMBLED POSITION

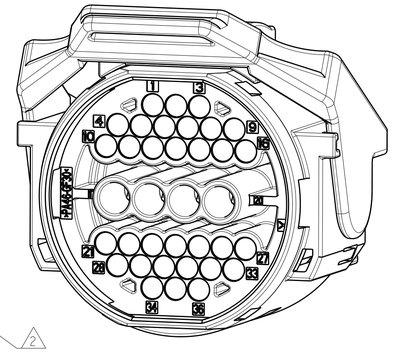

APPLICABLE COMPONENTS TABLE			
TE PART #	FINISH	WIRE SIZE	DESCRIPTION
1418844-1	Sn	0.25-0.35mm²	MCON 1.2 RECEPTACLE
	Sn	22AWG	MCON 1.2 RECEPTACLE
1670146-1	Sn	0.50-0.75mm²	MCON 1.2 RECEPTACLE
1418850-1	Sn	1.0-1.5mm²	MCON 1.2 RECEPTACLE
1241392-1	Sn	0.20-0.35mm²	MCP 2.8K RECEPTACLE
1241394-1	Sn	0.50-1.00mm²	MCP 2.8K RECEPTACLE
1241396-1	Sn	1.00-2.50mm²	MCP 2.8K RECEPTACLE

WIRE SEAL #	INSULATION RANGE	TERMINAL SYSTEM
967067-2	0.9-1.4	MCON 1.2
967067-1	1.4-2.1	
963294-1	1.2-2.0	MCP 2.8K
963293-1	2.0-2.7	
963292-1	2.7-3.0	

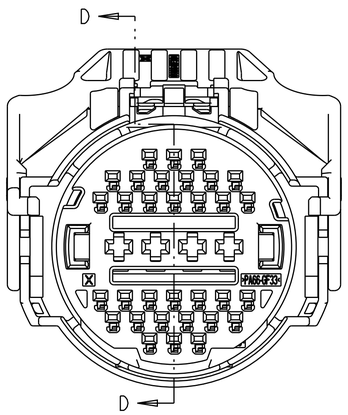

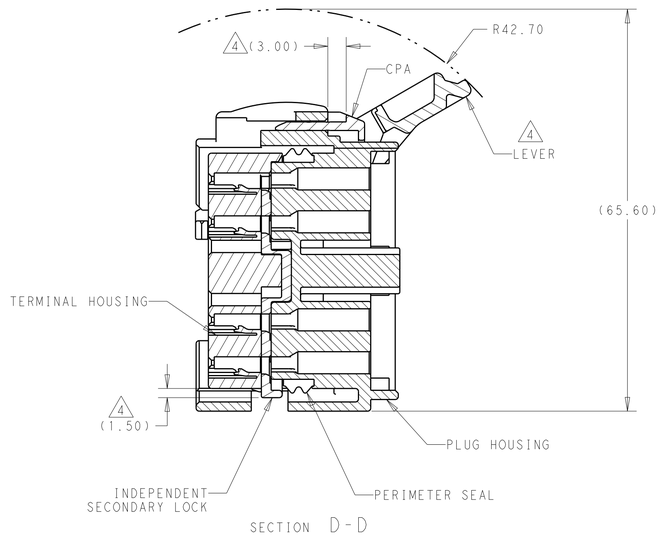

SECTION D-D

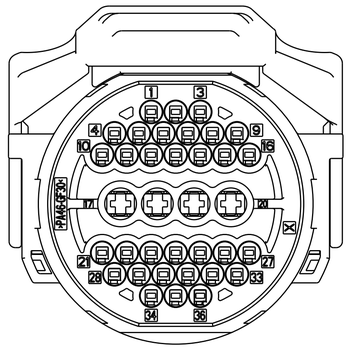

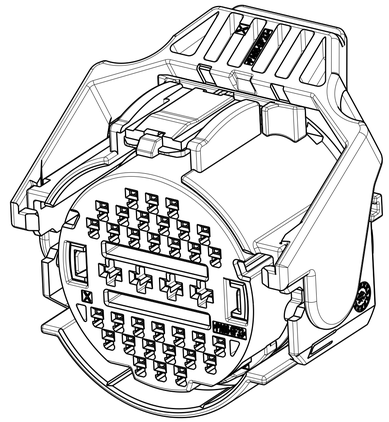

1. MATERIAL:
   PLUG HOUSING : NYLON 46 30% GLASS FILLED, BLACK.
   TERMINAL HOUSING: NYLON 6/6, 33% GLASS FILLED, BLACK
   ISL: PBT 15% GLASS FILLED, RED
   LEVER: NYLON 6/6, 33% GLASS FILLED, NATURAL
   CPA: PBT 15% GLASS FILLED, RED
   PERIMETER SEAL: SILICONE

2. WIRE DRESS, TE PART # 2138319-1, TO BE PURCHASED SEPERATELY.

3. APPLICABLE TERMINALS: SEE TABLE

4. LEVER, CPA, & ISL SHOWN IN SHIPPING POSITION, UNLESS OTHERWISE NOTED.

5. 2138314-1 KEYING OPTION "A" SHOWN IN GENERAL VIEWS.

6. THE CONNECTOR SHOWN MATES WITH THE FOLLOWING TE CAP CONNECTOR. CONSULT FACTORY FOR ADDITIONAL MATING CONNECTOR OPTIONS. 2138338-* (SEE SEPERATE DRAWING FOR APPROPRIATE DASH NUMBER)

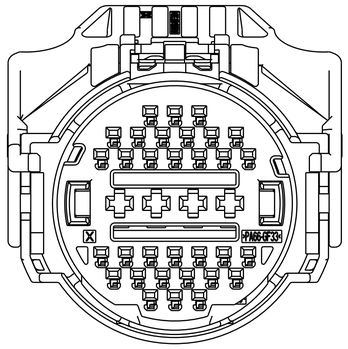

SCALE 2:1

KEYING OPTION "A"

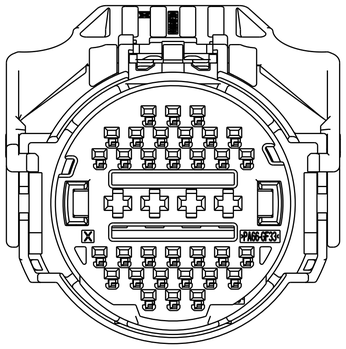

SCALE 2:1

KEYING OPTION "B"

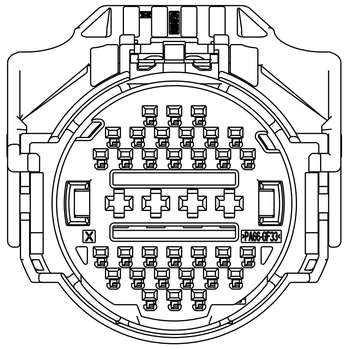

SCALE 2:1

KEYING OPTION "C"

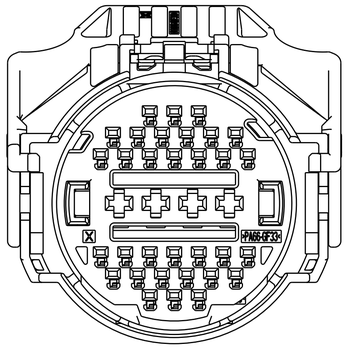

SCALE 2:1

KEYING OPTION "D"

KEY	NUMBER OF OPEN CIRCUITS	36	35	34	33	32	31	30	29	28	27	26	25	24	23	22	21	20	19	18	17	16	15	14	13	12	11	10	9	8	7	6	5	4	3	2	1	ASSEMBLY PART #
A	25				33		31			28					23			20			17	16	15						9	8						2		1-2138314-1
A	22	36	35	34	33		31			28					23			20			17	16	15						9	8						2		1-2138314-0
A	28				33		31			28					23							16	15						9							2		2138314-9
A	24	36	35	34	33		31			28					23			20			17	16	15						9									2138314-8
A	29	36			33													20			17	16	15						9									2138314-7
A	32	36			33													20			17																	2138314-6
A	27	36			33													20			17	16	15						9	8						2		2138314-5
D	36																																					2138314-4
C	36																																					2138314-3
B	36																																					2138314-2
A	36																																					2138314-1

TERMINAL HOLE POSITION
CAVITITIES WITH A NUMERIC SYMBOL INDICATES CLOSED TERMINAL LOCATION
BLANK CAVITIES INDICATES OPEN TERMINAL HOLE LOCATIONS

THIS DRAWING IS A CONTROLLED DOCUMENT.

DIMENSIONS: mm

TOLERANCES UNLESS OTHERWISE SPECIFIED:
0 PLC ±0.0
1 PLC ±0.3
2 PLC ±0.1
3 PLC ±0.05
4 PLC ±0.0
ANGLES ±3°

MATERIAL -
FINISH -

DWN 10MAY2011 M. HITCHCOCK
CHK 10MAY2011 R. HETRICK
APVD 10MAY2011 R. HETRICK
PRODUCT SPEC -
APPLICATION SPEC -
WEIGHT -

TE Connectivity

NAME 36P SEALED HYBRID (32X 1.2, 4X 2.8) PLUG ASSEMBLY

SIZE	CAGE CODE	DRAWING NO	RESTRICTED TO
A1	00779	C-2138314	-

Customer Drawing SCALE 2:1 SHEET 1 OF 1 REV A1

Downloaded From Oneyac.com

单击下面可查看定价，库存，交付和生命周期等信息

>>TE Connectivity(泰科)

Downloaded From Oneyac.com