THIS DRAWING IS UNPUBLISHED. RELEASED FOR PUBLICATION -,- .
© COPYRIGHT - By - ALL RIGHTS RESERVED.

REVISIONS

P	LTR	DESCRIPTION	DATE	DWN	APVD
	D	REVISED PER ECO-17-002455	23FEB2017	SY	SY

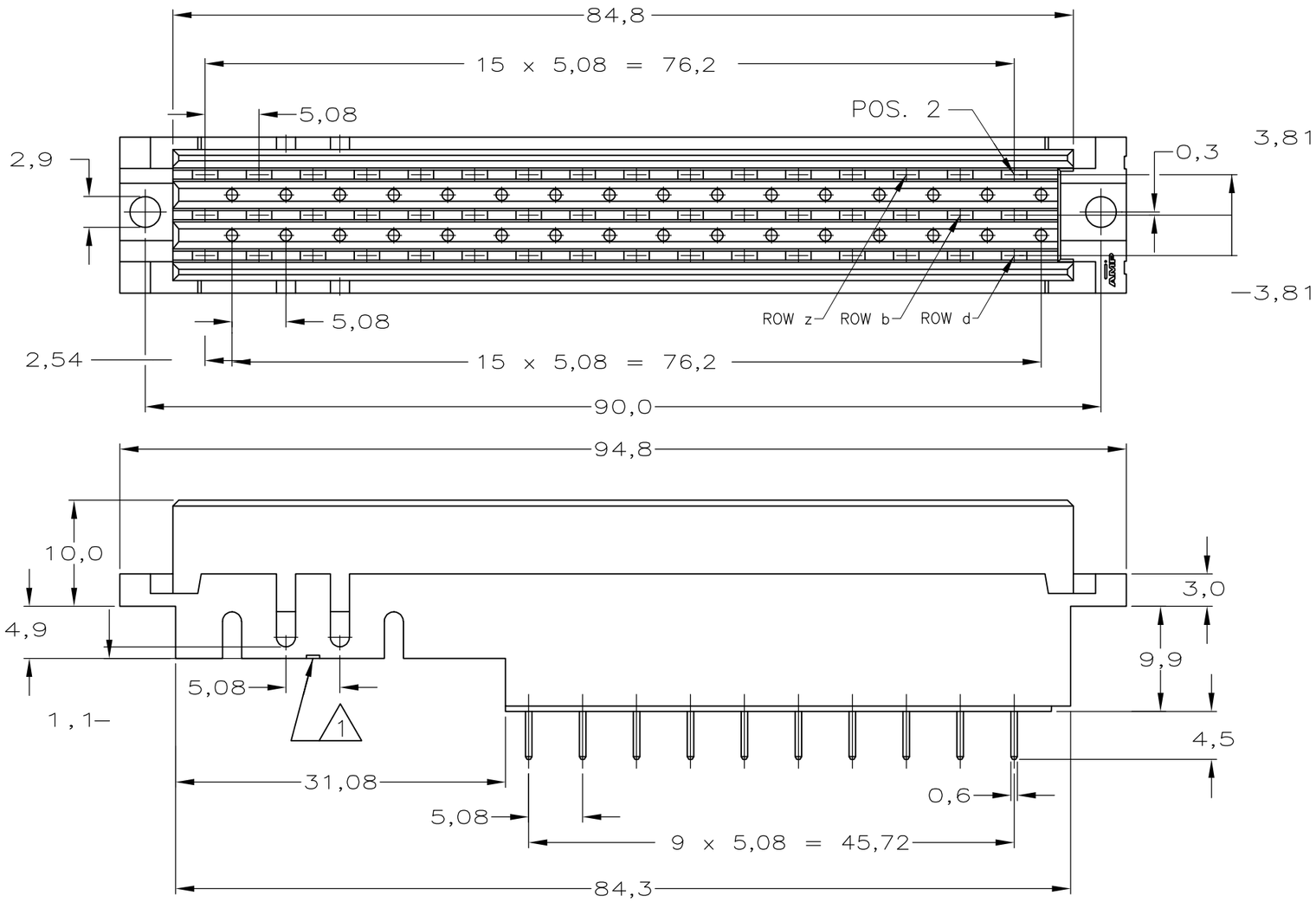

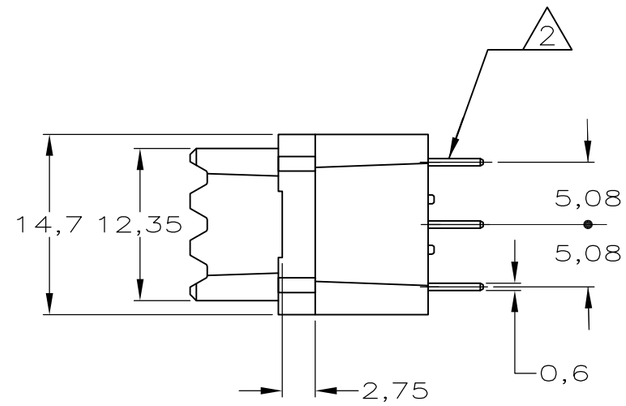

NOTES:

1. 2 CHAMFERS AT INSIDE FOR LOCATION OF REMOVAL TOOL FOR MODULE p.n.216519-1
2. SOLDERPOSTS SUITABLE FOR 0,80 OR 1,0 NOM. DIA HOLES

CONFIRMS TO IEC60603-2 PERFORMANCE LEVEL II REQUIREMENT IN CONTACT AREA Sn OVER Ni IN SOLDER AREA	HOUSING: THERMOPL. POLYESTER G.F. COLOUR: GREY CONTACTS: PHOSPHORBRONZE	216520-4
FINISH	MATERIAL	PARTNUMBER

ROW	2	4	6	8	10	12	14	16	18	20
z	X	X	X	X	X	X	X	X	X	X
b	X	X	X	X	X	X	X	X	X	X
d	X	X	X	X	X	X	X	X	X	X
POS	S									

AN ASTERISK ,,X'' DENOTES A CONTACT

THIS DRAWING IS A CONTROLLED DOCUMENT.

DIMENSIONS: mm

TOLERANCES UNLESS OTHERWISE SPECIFIED:
0 PLC ± -
1 PLC ± -
2 PLC ± -
3 PLC ± -
4 PLC ± -
ANGLES ± -

MATERIAL -

FINISH -

DWN L.V.D.HEIJDEN 15 NOV.1994
CHK J.V.GUNSVEN -
APVD L.V.SOEST -
PRODUCT SPEC —
APPLICATION SPEC —
WEIGHT 0.000000

TE Connectivity

NAME 3x10 POS. WITH SOLDER POSTS 3x6 POS WITH FEATURE FOR CRIMP-ON, SNAP-IN .

SIZE	CAGE CODE	DRAWING NO	RESTRICTED TO
A3	00779	C-216520	—

CUSTOMER DRAWING

SCALE	SHEET	REV
—	1 OF 1	D

Downloaded From Oneyac.com

单击下面可查看定价，库存，交付和生命周期等信息

>>TE Connectivity(泰科)

Downloaded From Oneyac.com